北工牌
PEI GONG

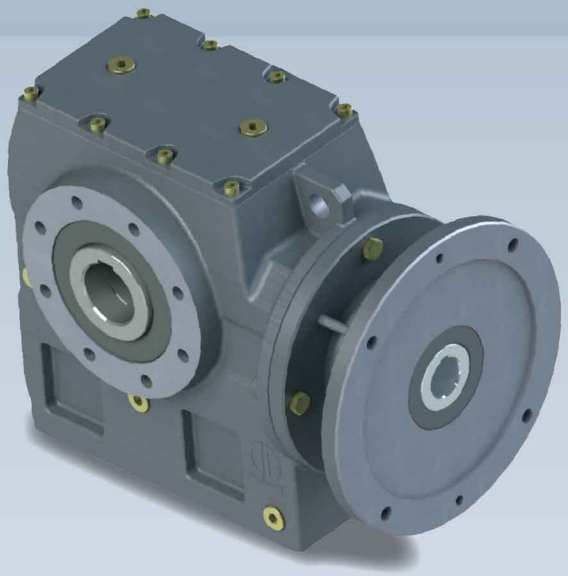

# PEI GONG
## PRODUCTS SERIES
## S系列齒輪減速機產品目錄

立翔 50 Since 1976 感謝有您

深耕台灣 放眼全球

2026 /
CATALOGUE

## S 系列斜齒蝸輪減速機 S series Helical Worm Gear Reducer

- 產品示意圖
  Helical Worm Gear Reducer Product's Type ---------- S01
- 簡介
  Characteristics Introduction ---------- S02-S03
- 斜齒蝸輪減速機產品代碼說明
  Product Codes for Helical Worm Gear Reducer ---------- S04
- 斜齒蝸輪減速機系統分解圖
  System Drawing for Helical Worm Gear Reducer ---------- S05
- 斜齒蝸輪減速機安裝方式
  Mounting Positions for Helical Worm Gear Reducer ---------- S06-S09
- 斜齒蝸輪減速機重量表及油量表
  Weight for Helical Worm Gear Reducer and Oil Table ---------- S10
- 機型與使用安全係數對照表
  Model and Service factor select table ---------- S11-S29
- 斜齒蝸輪減速機尺寸規範
  Helical Worm Gear Reducer series dimension ---------- S30-S55

## 產品型號示意圖 Product Type

S···AM

SF...AM

SA...AM

SAF···AM

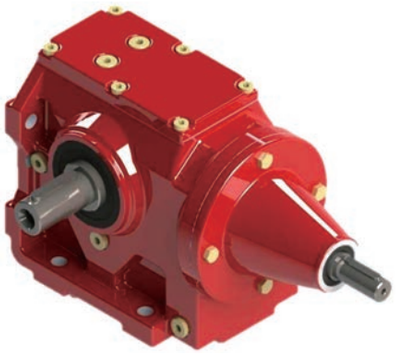

S···AD

S···

SA···T..AM

S···R...

# 斜齒蝸輪輪減速機 - 簡介
Elucidation

## 性能特性 Characteristics

- 模組化設計為此減速機的特色，可以方便配合各種型式的馬達或採用其他動力輸入，同種機型可配用多種功率的馬達，也可以使用於各種機型之間的組合連接。
  Gear reducers are based on the building block design, so it's convenient for them to fit all types of motors or to connect with other power input. The same type of gear reducers can fit motors with different power, so that it's possible for different types of machines to combine or connect.
- 傳動效率高，單機型減速機效率高達 96%。
  High transmission efficiency. A single stage can reach a transmission efficiency as much as 96%.
- 傳動比劃分細，範圍廣，組合機型可以形成較大的傳動比，輸出轉速低。
  Precise division of transmission ratio with a wide range, The combination of Reducers can produce a larger transmission ratio at a low output rotational speed and larger torque.
- 安裝形式多樣，可選擇底座、B5 或 B14 法蘭安裝。
  Various ways of installation. Horizontal installation at any position or flanged installation.

## 場所條件 Working Environment

- 環境溫度，-40℃ ~50℃ . 0℃以下啟動時潤滑油要加熱到 0℃以上。
  Environment temperature-40℃ ~50℃ .The lubrication should be heated until above 0℃ if the machine works below 0℃ .
- 海拔不可超過 1000 公尺。
  The working place should be lower than 1000 meters above sea level.
- 輸入轉速不可大於 1800 rpm，齒輪最高圓周速度不超過 22m/s。
  The input rotational speed should not exceed 1800 rpm, The circumferential speed of the gear should not exceed 20m/s.
- 可用於正反運轉。
  Suitable for normal-reverse rotation.
- 無行業限制。
  Without industry limitation.
- 其他條件下使用，請與公司業務部門聯繫。
  Other conditions of installation, please contact with the business sector.

## 選型指南 Instructions for Selection

在確定使用係數之前，必須先確定一天的運行小時數，每小時的起停次數和負載類型，其中負載類型按下列公式計算。
Make sure daily operating time, the starting frequency and the load classifications before deciding the service factor.
The load classifications is calculated with the following formula.

## 選型指南 Instructions for Selection

< Ⅰ > 均勻負載，慣性加速係數≦ 0.2
Uniform load, mass acceleration factor ≦ 0.2
< Ⅱ > 中等沖擊負載，慣性加速係數≦ 3
Medium impact load, mass acceleration factor ≦ 3
< Ⅲ > 強烈沖擊負載，慣性加速係數≦ 10
Heavy shock load, mass acceleration factor ≦ 10
如果慣性加速係數 >10，請與公司業務部門聯繫。
If the inertial acceleration factor >10, please contact with the business sector.
實際的工況係數 (fA) 須滿足下式，使用係數 (fB) ≧工況係數 (Fa)
The actural operating mode factor (fA) should meet the following formula, service factor (Fb) ≧ operating mode factor (fA) .
使用係數 (fB) 在後面的選型參數表中列出。
The service factor (fB) is listed in the parameter selection list.

## 選型指南 Instructions for Selection

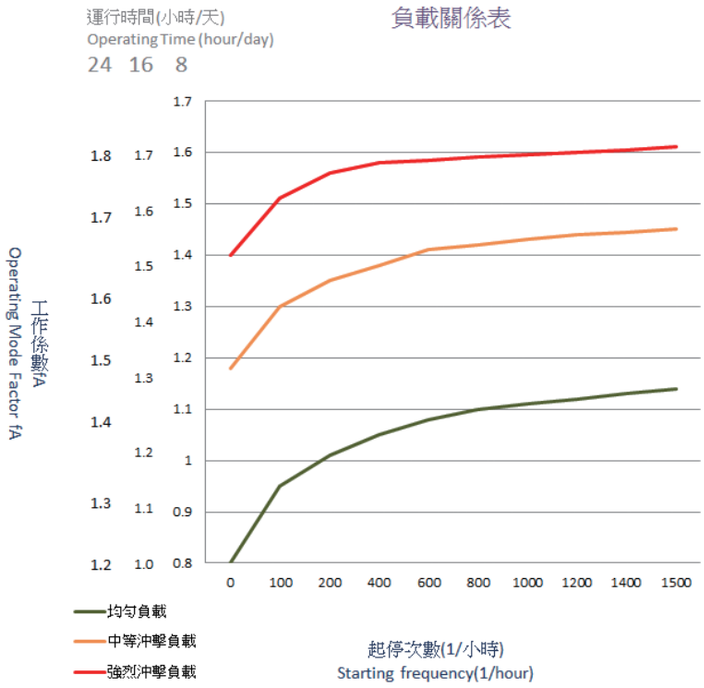


慣性加速係數 Mass acceleration factor = 所有外部轉動慣量 All external mass moments of inertia / 驅動電機轉動慣量 Mass moment of inertia on the motor end

## 斜齒蝸輪減速機產品代碼說明
Product Codes for Helical Worm Gear Reducer

| S | - | F | - | 47 | - | T | - | AM | - | 71 | - | 4 | / | B | / | 27.89 | / | M2 | - | A | / | V1 |
|---|---|---|---|---|---|---|---|---|---|---|---|---|---|---|---|---|---|---|---|---|---|---|
| (1) | | (2) | | (3) | | (4) | | (5) | | (6) | | (7) | | (8) | | (9) | | (10) | | (11) | | (12 ) |

| | | | | | | | |
|---|---|---|---|---|---|---|---|
| (1) 機型 Type | S 系列斜齒蝸輪輪減速機 S - Helical Worm Gear Reducer | | | | | | |
| (2) 型號 Model | 無代號表示為底座安裝<br>A 表示中空出力軸裝配型<br>F 表示為出力法蘭安裝型<br>AF 表示為中空出力軸與出力法蘭安裝 | | | Non - Foot mounted install<br>A - Hollow output shaft install<br>F - Output flange install<br>AF - Hollow output shaft & output flange install | | | |
| (3) 規格 Code | 37 | 47 | 57 | 67 | 77 | 87 | 97 |
| (4) 安裝類型 Mounted | T 表示扭力臂安裝 | | | T - Torque Arm mounted | | | |
| (5) 入力型式 Input type | 無代號表示馬達安裝<br>AM 入力法蘭<br>AD 標準入力軸 | | | Non - With Motor<br>AM - With input flange<br>AD - With input shaft | | | |
| (6) 馬達規格代號<br>Specification code of motor | 馬達規格代號 ( 馬達中心高 ) | | | Motor IEC Frame | | | |
| (7) 馬達級數<br>Pole number of motor | 分為 2P、4P、6P、8P | | | Pole：2P 4P 6P 8P | | | |
| (8) 剎車器 Brake | 無代碼表示沒有剎車<br>B 代表有剎車裝配 <DC 或是 AC 剎車 > | | | Non - Standard motor type<br>B - Brake available Type <DC or AC> | | | |
| (9) 減速機減速比 Ratio | 代表齒輪傳動比 | | | Gear Ratio | | | |
| (10) 安裝方位<br>Mounting position | M1 為安裝方位代號<br>無標示時，出廠安裝方位為 M1 | | | The standard type is M1.<br>Total have 6 mounting positions, please refer to page S06 to select. | | | |
| (11) 出力部安裝方式<br>Output direction install | 出力部可依照機構不同而有 A、B 向，詳細情況請參考 S09 頁<br>Output shaft have A and B direction, please refer to page S09 | | | | | | |
| (12) 接線盒位置<br>Terminal box position | 馬達與接線盒位置可依照安裝方式之不同而調整，詳細情況請參考第 S06 頁<br>Motor and Terminal Box can adjust for mounting position, please refer to page S06. | | | | | | |

# 斜齒蝸輪減速機系統分解圖
## System Drawing for Helical Worm Gear Reducer

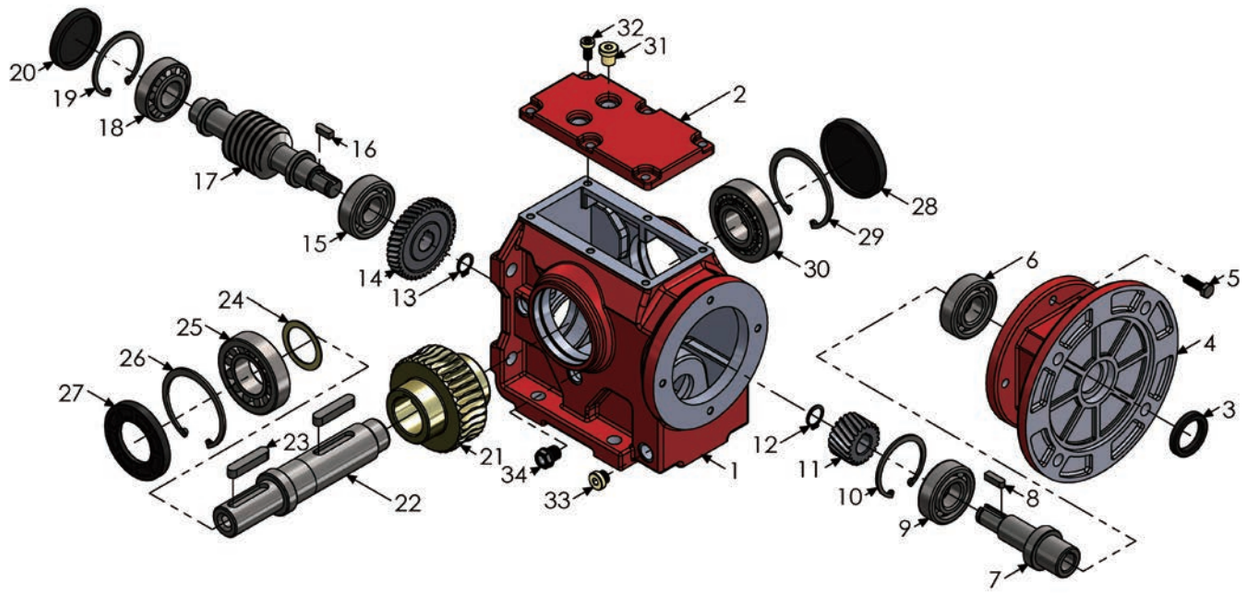


| No. | 零件名稱 | Name of parts | No. | 零件名稱 | Name of parts |
|---|---|---|---|---|---|
| 1 | 外殼 | Case | 22 | 出力軸 | Output shaft |
| 2 | 外殼上蓋 | Case cover | 23 | 鍵 | Key |
| 3 | 油封 | Oil seal | 24 | 墊圈 | Washer |
| 4 | 入力法蘭 | Input flange | 25 | 軸承 | Bearing |
| 5 | 外六角螺絲 | Hexagon head bolt | 26 | 扣環 | Snap ring |
| 6 | 軸承 | Bearing | 27 | 油封 | Oil seal |
| 7 | 中空入力軸 | Input hollow shaft | 28 | 油封蓋 | Oil seal cover |
| 8 | 鍵 | Key | 29 | 扣環 | Snap ring |
| 9 | 軸承 | Bearing | 30 | 軸承 | Bearing |
| 10 | 扣環 | Snap ring | 31 | 透氣蓋 | Ventilate plug |
| 11 | 入力齒輪 | Input gear | 32 | 螺釘 | Screw |
| 12 | 扣環 | Snap ring | 33 | 排油栓 | Drain plug |
| 13 | 扣環 | Snap ring | 34 | 油鏡 | Oil gauge |
| 14 | 第一段齒輪 | 1st Gear | | | |
| 15 | 軸承 | Bearing | | | |
| 16 | 鍵 | Key | | | |
| 17 | 蝸桿 | Worm Shaft | | | |
| 18 | 軸承 | Bearing | | | |
| 19 | 扣環 | Snap ring | | | |
| 20 | 油封蓋 | Oil seal cover | | | |
| 21 | 蝸輪 | Worm wheel | | | |

## 安裝方式
Mounting positions

斜齒輪減速機分為六種安裝方式，以下圖示闡述斜齒輪減速機常見的各種安裝型式。
Bevel helical gear reducer is divided into six kinds of installation,the following illustration describes bevel helical gear reducer commom variety of installation.

| 臥式 Horizontal type | 倒掛式 Hang type | 側壁式 Side wall type |
|---|---|---|
| M1 | M3 | M2 M4 M5 M6 |

| S 系列 - 底座安裝型 FOOT MOUNTED | S 系列 - 出力法蘭安裝型 OUTPUT FLANGE MOUNTED |
|---|---|
| 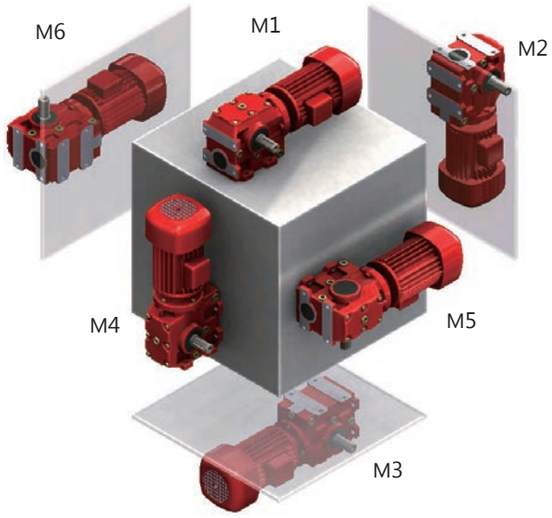 | 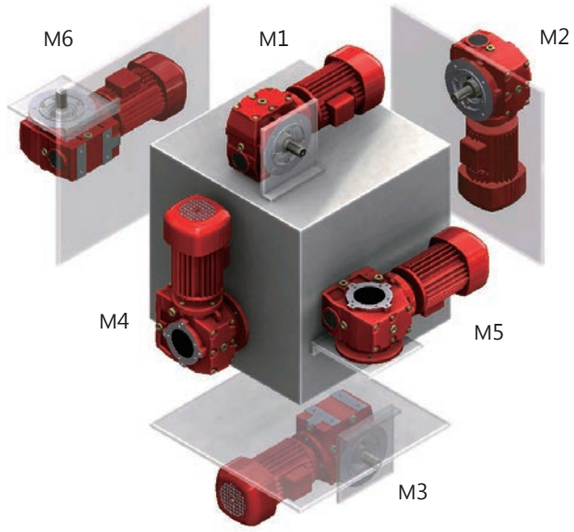 |





| | V1- 上方 (270 °) Upper side | V2- 下方 (90°) Lower side | V3- 左方 (0 °) Left side | V4- 右方 (180°) Right side |
|---|---|---|---|---|
| 馬達接線盒位置依風扇蓋配合出力軸（水平置）看線盒方向 View from Terminal Box and Output shaft | 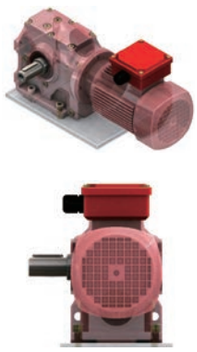 | 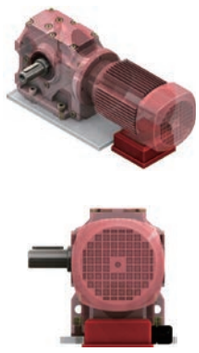 | 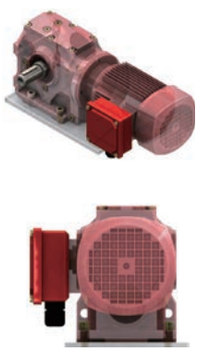 | 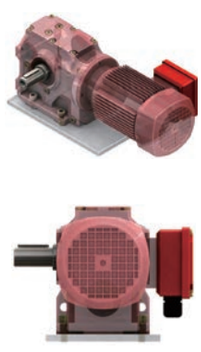 |
| 標準進線位置 View from Terminal BOX | U | D | L | R |
| | 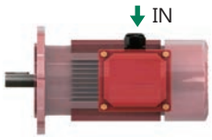  | 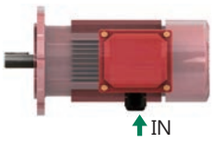  | 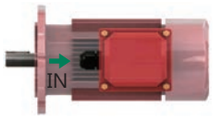  | |

齒輪減速機分為六種安裝方式，以下圖示簡述斜齒輪減速機各種安裝方式與其線盒位置以及五金零件方位之對應關係。

透氣蓋與加油孔 Ventilate plug and Oil filling hole　油鏡 Oil gauge　排油栓 Drain plug

S 系列 - 底座安裝型 FOOT MOUNTED

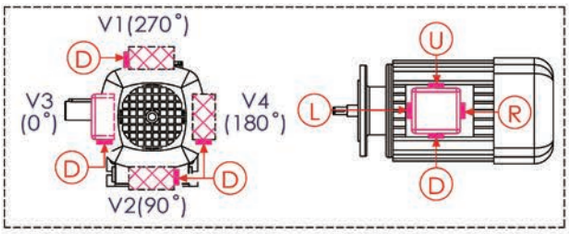


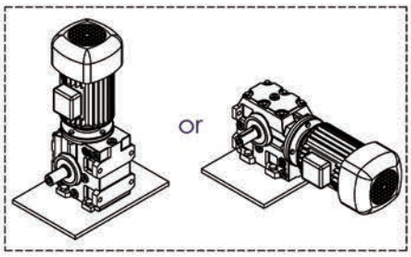


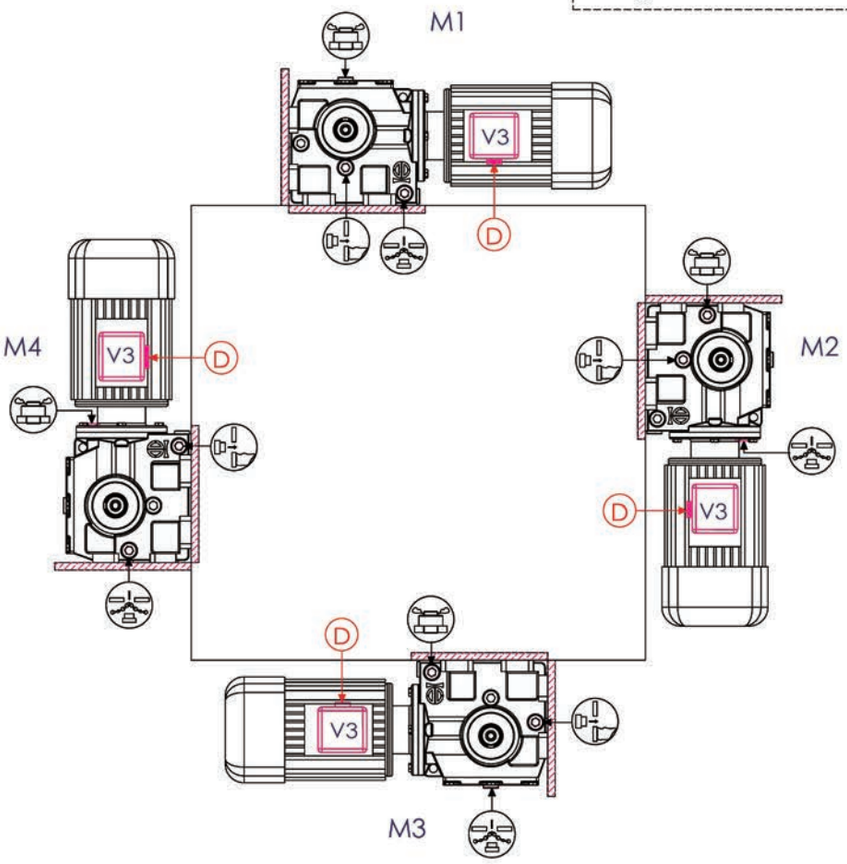


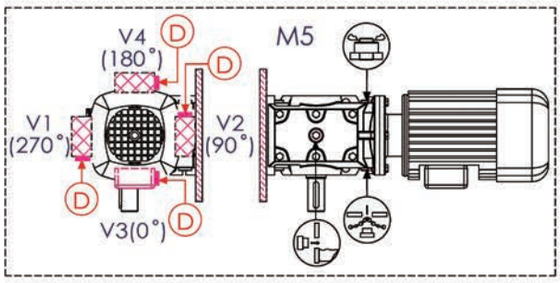


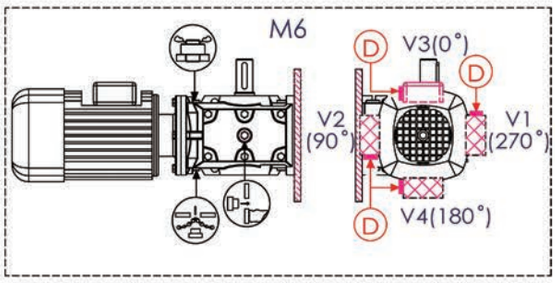

齒輪減速機分為六種安裝方式，以下圖示簡述斜齒輪減速機各種安裝方式與其線盒位置以及五金零件方位之對應關係。

透氣蓋與加油孔 Ventilate plug and Oil filling hole　油鏡 Oil gauge　排油栓 Drain plug

S 系列 - 出力法蘭安裝型 OUTPUT FLANGE MOUNTED

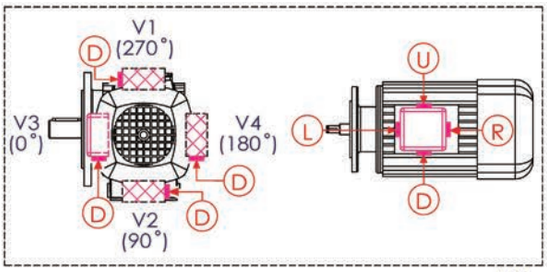


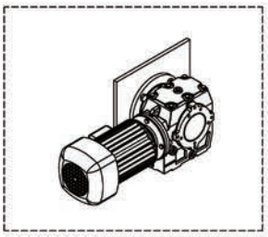

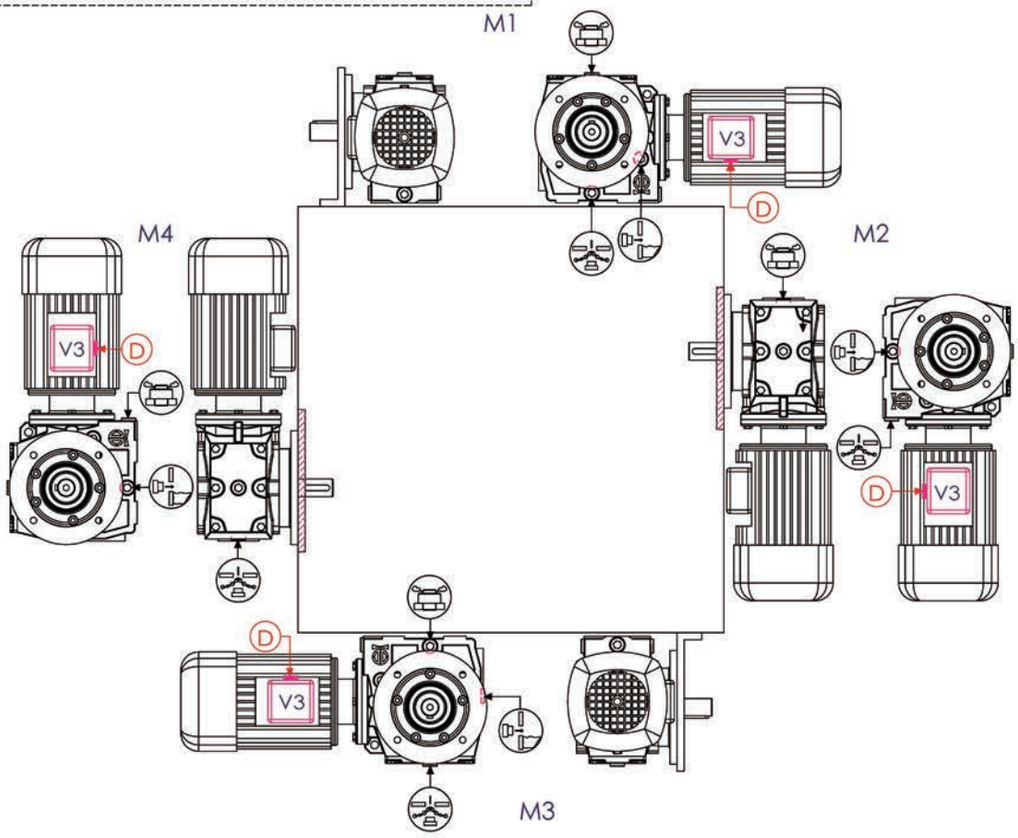


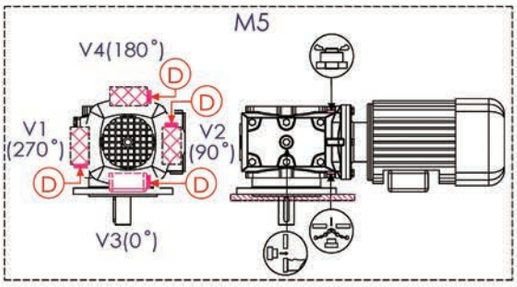


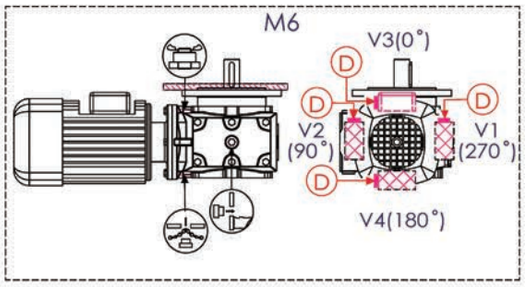

齒輪減速機分為六種安裝方式，以下圖示簡述斜齒輪減速機各種安裝方式與其線盒位置以及五金零件方位之對應關係。

透氣蓋與加油孔 Ventilate plug and Oil filling hole　油鏡 Oil gauge　排油栓 Drain plug

S 系列 - 扭力臂安裝型 TORQUE ARM MOUNTED

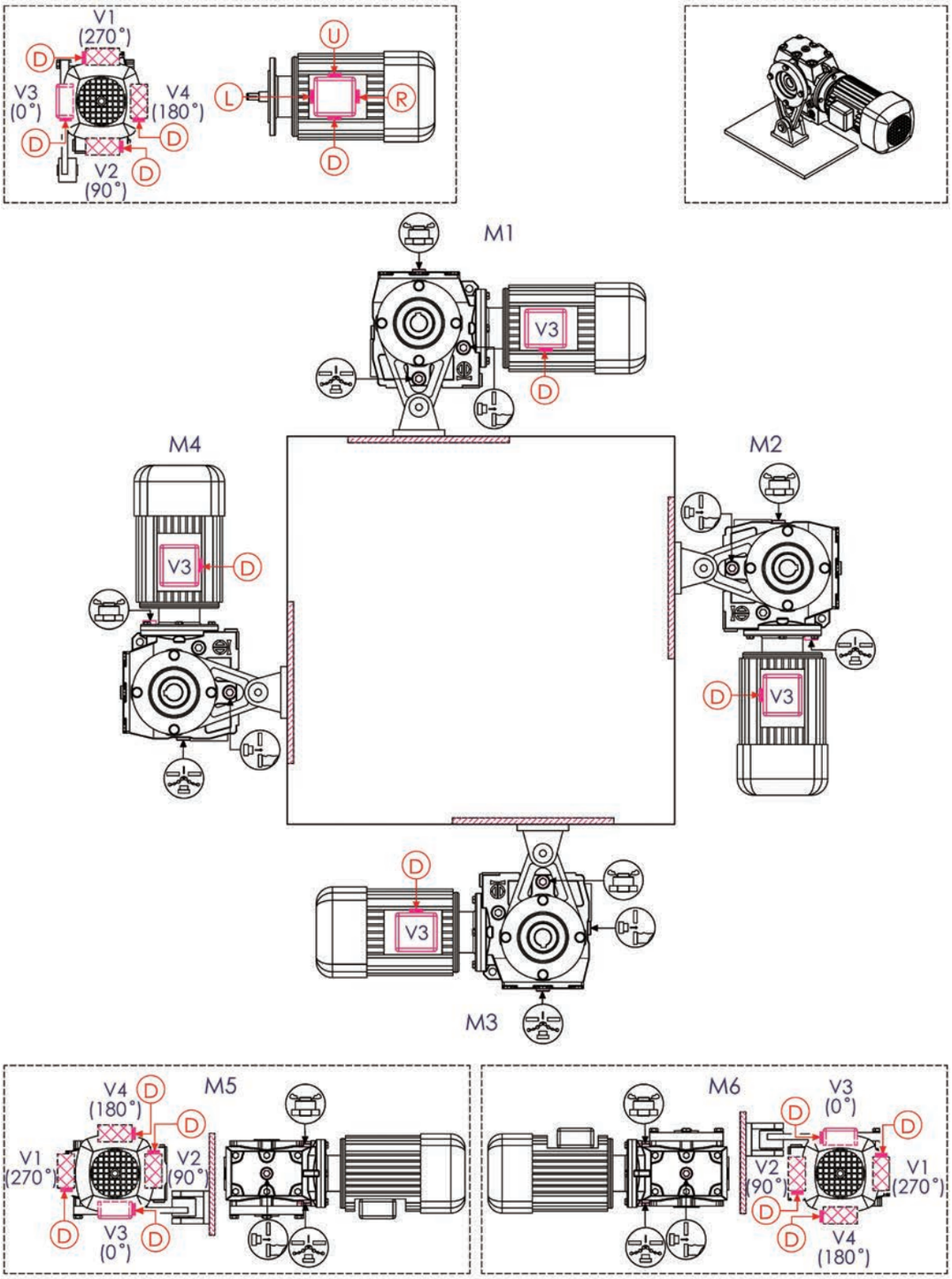

## Direction of Output shaft 出力軸配置

| 標準出力軸型 Output shaft | | 中空出力軸型 Hollow shaft | |
|---|---|---|---|
| A | B | A | B |
| 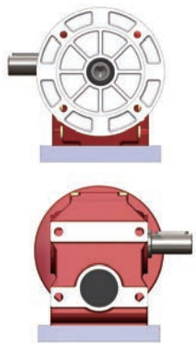 | 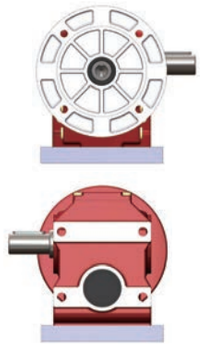 | 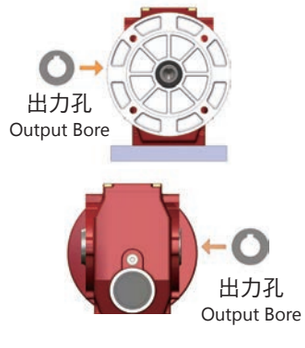 | 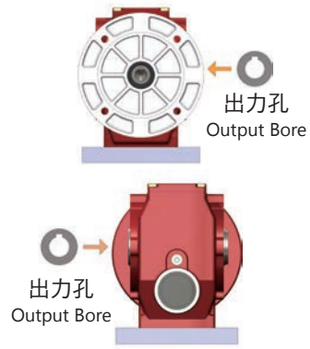 |

| 出力法蘭型 Output flange | | 扭力臂型 Torque arm | |
|---|---|---|---|
| A | B | A | B |
| 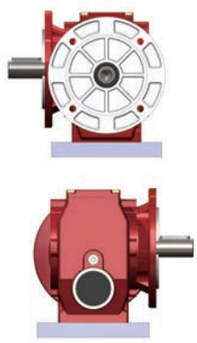 | 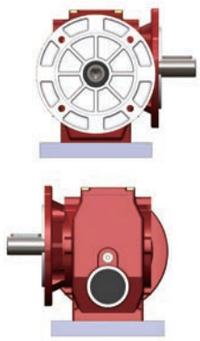 | 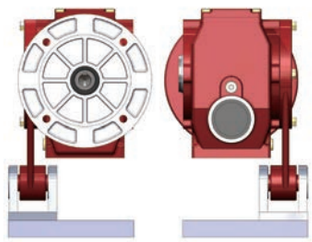 | 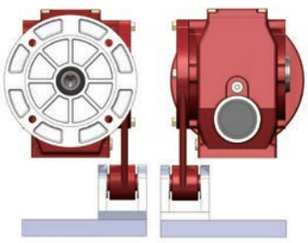 |

## S 系列油量表 ( 單位：l ) S series oil capacity table (Unit: l)

| 機型 /Type | | S37 | S47 | S57 | S67 | S77 | S87 | S97 |
|---|---|---|---|---|---|---|---|---|
| 安裝方式 | M1 | 0.2 | 0.3 | 0.5 | 0.8 | 1.6 | 2.6 | 5.3 |
| | M2 | 0.3 | 0.6 | 1.0 | 1.9 | 3.5 | 6.5 | 11.7 |
| | M3 | 0.4 | 0.5 | 0.9 | 2.0 | 3.1 | 5.5 | 10.5 |
| | M4 | 0.5 | 0.8 | 1.3 | 2.7 | 5.0 | 9.6 | 17.6 |
| | M5 | 0.3 | 0.6 | 1.1 | 2.2 | 3.7 | 6.7 | 13.3 |
| | M6 | 0.3 | 0.6 | 1.1 | 2.2 | 3.7 | 6.7 | 13.3 |

## S 系列重量表 ( 單位：KG ) S series weight table (Unit: KG )

| 機型 /Type | S37 | S47 | S57 | S67 | S77 | S87 | S97 |
|---|---|---|---|---|---|---|---|
| 重量 /Weight | 7.5 | 10.0 | 13.5 | 27.0 | 45.0 | 86.0 | 150.0 |
| 備註 Note | 此重量表僅為減速機重量 ( 不含油量 )，若選購入力軸、入力法蘭規範，請以表內數字加 10% 重量。若選備馬達安裝，重量請洽詢業務人員。<br>The table only for Gear Reducer, without oil weight. Please add 10% weight if you select input shaft or input flange. If you select Motor installation, please get the weight from sale Dept. | | | | | | |

# 機型與使用安全係數對照表
## Model and Service factor select table

| 輸出轉速 Output speed (r/min) | 輸出轉矩 Output torque (N.M) | 傳動比 Ratio (i) | 使用係數 Service factor | 機型 Type | 馬達級數 Motor pole |
|---|---|---|---|---|---|
| 0.12 KW | | | | | |
| 0.12 | 4610 | 11267 | 0.90 | S97 R57 | 4P |
| 0.14 | 4210 | 10078 | 1.00 | SF97 R57 | |
| 0.16 | 3500 | 8608 | 1.20 | SA97 R57 | |
| 0.18 | 3090 | 7554 | 1.35 | SAF97 R57 | |
| 0.18 | 3120 | 7643 | 0.80 | | 4P |
| 0.21 | 2630 | 6706 | 0.95 | S87 R57 | |
| 0.23 | 2330 | 5875 | 1.05 | SF87 R57 | |
| 0.27 | 1960 | 5187 | 1.25 | SA87 R57 | |
| 0.30 | 1740 | 4606 | 1.45 | SAF87 R57 | |
| 0.36 | 1450 | 3872 | 1.70 | | |
| 0.39 | 1340 | 3540 | 0.95 | | 4P |
| 0.45 | 1170 | 3098 | 1.10 | | |
| 0.58 | 1280 | 2374 | 0.95 | | |
| 0.66 | 1130 | 2083 | 1.10 | S77 R37 | |
| 0.76 | 960 | 1813 | 1.30 | SF77 R37 | |
| 0.79 | 910 | 1745 | 1.35 | SA77 R37 | |
| 0.86 | 840 | 1600 | 1.50 | SAF77 R37 | |
| 0.98 | 735 | 1404 | 1.70 | | |
| 1.1 | 645 | 1245 | 1.90 | | |
| 1.0 | 665 | 1363 | 0.85 | | 4P |
| 1.2 | 575 | 1194 | 1.00 | | |
| 1.3 | 515 | 1045 | 1.10 | | |
| 1.5 | 445 | 914 | 1.30 | S67 R37 | |
| 1.7 | 400 | 809 | 1.40 | SF67 R37 | |
| 1.9 | 355 | 712 | 1.60 | SA67 R37 | |
| 2.2 | 295 | 615 | 1.95 | SAF67 R37 | |
| 2.5 | 265 | 543 | 2.20 | | |
| 2.9 | 220 | 469 | 2.60 | | |
| 3.3 | 197 | 424 | 2.90 | | |
| 3.8 | 180 | 365 | 3.20 | | |
| 2.1 | 315 | 655 | 0.95 | | 4P |
| 2.4 | 275 | 574 | 1.10 | | |
| 2.7 | 240 | 506 | 1.25 | S57 R17 | |
| 3.2 | 210 | 438 | 1.45 | SF57 R17 | |
| 3.6 | 183 | 388 | 1.65 | SA57 R17 | |
| 4.1 | 163 | 336 | 1.85 | SAF57 R17 | |
| 4.7 | 140 | 294 | 2.10 | | |
| 5.1 | 134 | 269 | 2.20 | | |
| 3.2 | 210 | 438 | 0.90 | | 4P |
| 3.6 | 183 | 388 | 1.00 | | |
| 4.1 | 162 | 336 | 1.15 | S47 R17 | |
| 4.7 | 139 | 294 | 1.35 | SF47 R17 | |
| 5.4 | 95 | 257 | 1.95 | SA47 R17 | |
| 6.0 | 113 | 229 | 1.65 | SAF47 R17 | |
| 6.9 | 99 | 200 | 1.90 | | |
| 7.4 | 92 | 187 | 2.00 | | |
| 6.8 | 99 | 202 | 0.95 | | 4P |
| 7.7 | 88 | 179 | 1.05 | S37 R17 | |
| 8.7 | 78 | 158 | 1.15 | SF37 R17 | |
| 9.6 | 72 | 144 | 1.25 | SA37 R17 | |
| 12 | 59 | 118 | 1.55 | SAF37 R17 | |
| 13 | 55 | 110 | 1.65 | | |
| 4.5 | 143 | 201.00 | 2.1 | S57 | 4P |
| 4.9 | 133 | 184.80 | 2.2 | SF57 | |
| 5.7 | 116 | 158.12 | 2.5 | SA57 | |
| 6.6 | 103 | 137.05 | 2.9 | SAF57 | |
| 4.5 | 138 | 201.00 | 1.30 | | 4P |
| 4.9 | 129 | 184.80 | 1.40 | S47 | |
| 5.7 | 112 | 158.12 | 1.55 | SF47 | |
| 6.6 | 99 | 137.05 | 1.75 | SA47 | |
| 7.0 | 93 | 128.10 | 1.85 | SAF47 | |

| 輸出轉速 Output speed (r/min) | 輸出轉矩 Output torque (N.M) | 傳動比 Ratio (i) | 使用係數 Service factor | 機型 Type | 馬達級數 Motor pole |
|---|---|---|---|---|---|
| 0.12 KW | | | | | |
| 6.9 | 95 | 201.00 | 1.8 | | 4P |
| 7.5 | 89 | 184.80 | 1.9 | S47 | |
| 8.7 | 77 | 158.12 | 2.2 | SF47 | |
| 10 | 68 | 137.05 | 2.5 | SA47 | |
| 11 | 64 | 128.10 | 2.6 | SAF47 | |
| 12 | 57 | 110.73 | 3.0 | | |
| 5.7 | 107 | 157.43 | 0.85 | | 6P |
| 6.2 | 99 | 144.40 | 0.95 | S37 | |
| 7.3 | 86 | 122.94 | 1.05 | SF37 | |
| 8.5 | 76 | 106.00 | 1.20 | SA37 | |
| 9.1 | 71 | 98.80 | 1.30 | SAF37 | |
| 10 | 64 | 86.36 | 1.45 | | |
| 8.8 | 74 | 157.43 | 1.25 | | 4P |
| 9.6 | 68 | 144.40 | 1.35 | | |
| 11 | 60 | 122.94 | 1.55 | | |
| 13 | 52 | 106.00 | 1.70 | | |
| 14 | 49 | 98.80 | 1.75 | | |
| 16 | 44 | 86.36 | 1.95 | | |
| 17 | 41 | 80.96 | 2.10 | | |
| 19 | 37 | 71.44 | 2.30 | | |
| 22 | 33 | 63.33 | 2.50 | S37 | |
| 25 | 35 | 55.93 | 2.30 | SF37 | |
| 27 | 33 | 51.30 | 2.50 | SA37 | |
| 32 | 28 | 43.68 | 2.90 | SAF37 | |
| 37 | 25 | 37.66 | 3.20 | | |
| 39 | 23 | 35.10 | 3.40 | | |
| 45 | 20 | 30.68 | 3.70 | | |
| 48 | 19 | 28.76 | 3.90 | | |
| 54 | 17 | 25.38 | 4.30 | | |
| 61 | 15 | 22.50 | 4.80 | | |
| 69 | 14 | 19.89 | 3.60 | | |
| 76 | 13 | 18.24 | 3.90 | | |
| 89 | 11 | 15.53 | 4.40 | | |
| 0.18 KW | | | | | |
| 0.29 | 2970 | 4606 | 0.85 | | 4P |
| 0.34 | 2480 | 3872 | 1.00 | | |
| 0.38 | 2350 | 3475 | 1.05 | S87 R57 | |
| 0.45 | 1970 | 2905 | 1.10 | SF87 R57 | |
| 0.51 | 1710 | 2586 | 1.25 | SA87 R57 | |
| 0.57 | 1520 | 2335 | 1.45 | SAF87 R57 | |
| 0.64 | 1320 | 2054 | 1.90 | | |
| 0.72 | 1170 | 1824 | 2.1 | | |
| 0.81 | 1050 | 1631 | 2.4 | | |
| 0.94 | 1220 | 1404 | 1.00 | | 4P |
| 1.1 | 1070 | 1245 | 1.15 | | |
| 1.2 | 990 | 1100 | 1.25 | S77 R37 | |
| 1.4 | 850 | 954 | 1.45 | SF77 R37 | |
| 1.6 | 745 | 837 | 1.65 | SA77 R37 | |
| 1.9 | 625 | 714 | 2.0 | SAF77 R37 | |
| 2.1 | 555 | 637 | 2.2 | SAF77 R37 | |
| 2.3 | 500 | 574 | 2.5 | | |
| 1.6 | 660 | 809 | 0.85 | | 4P |
| 1.9 | 580 | 712 | 1.00 | S67 R37 | |
| 2.2 | 490 | 615 | 1.15 | SF67 R37 | |
| 2.4 | 440 | 543 | 1.30 | SA67 R37 | |
| 2.8 | 370 | 469 | 1.55 | SAF67 R37 | |
| 3.1 | 335 | 424 | 1.70 | | |
| 3.6 | 295 | 365 | 1.90 | | |
| 3.0 | 345 | 438 | 0.85 | | 4P |
| 3.4 | 305 | 388 | 1.00 | S57 R17 | |
| 3.9 | 270 | 336 | 1.10 | SF57 R17 | |
| 4.5 | 235 | 264 | 1.30 | SA57 R17 | |
| 4.9 | 220 | 269 | 1.35 | SAF57 R17 | |

# 斜齒蝸輪減速機 Helical Worm Gear Reducer

| 輸出轉速 Output speed (r/min) | 輸出轉矩 Output torque (N.M) | 傳動比 Ratio (i) | 使用係數 Service factor | 機型 Type | 馬達級數 Motor pole |
|---|---|---|---|---|---|
| 0.18 KW | | | | | |
| 5.8 | 188 | 229 | 1.60 | S57 R17 | 4P |
| 6.5 | 169 | 204 | 1.80 | SF57 R17 | |
| 7.1 | 154 | 187 | 1.95 | SA57 R17 | |
| | | | | SAF57 R17 | |
| 4.5 | 230 | 294 | 0.80 | | 4P |
| 5.1 | 158 | 257 | 1.15 | | |
| 5.8 | 185 | 229 | 1.00 | S47 R17 | |
| 6.6 | 162 | 200 | 1.15 | SF47 R17 | |
| 7.1 | 152 | 187 | 1.20 | SA47 R17 | |
| 8.0 | 134 | 165 | 1.40 | SAF47 R17 | |
| 8.9 | 121 | 148 | 1.55 | | |
| 10 | 108 | 131 | 1.70 | | |
| 4.0 | 255 | 217.41 | 2.2 | S67 | 6P |
| 4.6 | 225 | 190.11 | 2.5 | SF67 | |
| 4.8 | 215 | 180.60 | 2.6 | SA67 | |
| | | | | SAF67 | |
| 4.3 | 220 | 201.00 | 1.35 | S57 | 6P |
| 4.7 | 205 | 184.80 | 1.45 | SF57 | |
| 5.5 | 180 | 158.12 | 1.65 | SA57 | |
| 6.3 | 159 | 137.05 | 1.85 | SAF57 | |
| 6.6 | 154 | 201.00 | 1.9 | S57 | 4P |
| 7.1 | 143 | 184.80 | 2.1 | SF57 | |
| 8.4 | 125 | 158.12 | 2.4 | SA57 | |
| 9.6 | 110 | 137.05 | 2.7 | SAF57 | |
| 4.3 | 215 | 201.00 | 0.85 | | 6P |
| 4.7 | 199 | 184.80 | 0.90 | S47 | |
| 5.5 | 173 | 158.12 | 1.00 | SF47 | |
| 6.3 | 153 | 137.05 | 1.10 | SA47 | |
| 6.8 | 144 | 128.10 | 1.20 | SAF47 | |
| 6.6 | 149 | 201.00 | 1.15 | | 4P |
| 7.1 | 138 | 184.80 | 1.25 | | |
| 8.4 | 121 | 158.12 | 1.40 | | |
| 9.6 | 107 | 137.05 | 1.60 | S47 | |
| 10 | 100 | 128.10 | 1.65 | SF47 | |
| 12 | 88 | 110.73 | 1.9 | SA47 | |
| 14 | 77 | 94.08 | 2.2 | SAF47 | |
| 16 | 69 | 84.00 | 2.4 | | |
| 18 | 60 | 71.75 | 2.8 | | |
| 19 | 69 | 69.36 | 2.2 | | |
| 8.4 | 115 | 157.43 | 0.80 | | 4P |
| 9.1 | 107 | 144.40 | 0.85 | | |
| 11 | 93 | 122.94 | 1.00 | | |
| 12 | 82 | 106.00 | 1.10 | | |
| 13 | 77 | 98.80 | 1.15 | | |
| 15 | 68 | 86.36 | 1.25 | | |
| 16 | 64 | 80.96 | 1.30 | | |
| 18 | 58 | 71.44 | 1.45 | | |
| 21 | 52 | 63.66 | 1.60 | | |
| 24 | 55 | 55.93 | 1.45 | | |
| 26 | 51 | 51.30 | 1.60 | | |
| 30 | 44 | 43.46 | 1.85 | S37 | |
| 35 | 38 | 37.66 | 2.10 | SF37 | |
| 38 | 36 | 35.10 | 2.20 | SA37 | |
| 43 | 32 | 30.68 | 2.40 | SAF37 | |
| 46 | 30 | 28.76 | 2.50 | | |
| 52 | 27 | 25.38 | 2.80 | | |
| 59 | 24 | 22.50 | 3.10 | | |
| 66 | 22 | 19.89 | 2.30 | | |
| 72 | 21 | 18.24 | 2.50 | | |
| 85 | 18 | 15.53 | 2.80 | | |
| 99 | 15 | 13.39 | 3.20 | | |
| 106 | 14 | 12.48 | 3.40 | | |
| 121 | 13 | 10.91 | 3.80 | | |
| 129 | 12 | 10.23 | 4.00 | | |

| 輸出轉速 Output speed (r/min) | 輸出轉矩 Output torque (N.M) | 傳動比 Ratio (i) | 使用係數 Service factor | 機型 Type | 馬達級數 Motor pole |
|---|---|---|---|---|---|
| 0.25 KW | | | | | |
| 0.45 | 2860 | 2905 | 0.85 | | 4P |
| 0.50 | 2500 | 2586 | 1.0 | S87 R57 | |
| 0.63 | 2240 | 2335 | 1.1 | SF87 R57 | |
| 0.71 | 1950 | 2054 | 1.3 | SA87 R57 | |
| 0.80 | 1550 | 1631 | 1.6 | SAF87 R57 | |
| 1.40 | 910 | 930 | 2.8 | | |
| 1.4 | 1230 | 954 | 1.00 | | 4P |
| 1.5 | 1080 | 837 | 1.15 | S77 R37 | |
| 1.8 | 910 | 714 | 1.35 | SF77 R37 | |
| 2.0 | 810 | 637 | 1.55 | SA77 R37 | |
| 2.3 | 730 | 574 | 1.70 | SAF77 R37 | |
| 2.6 | 625 | 499 | 2.00 | | |
| 2.4 | 635 | 543 | 0.90 | | 4P |
| 2.8 | 540 | 469 | 1.05 | S67 R37 | |
| 3.1 | 485 | 424 | 1.15 | SF67 R37 | |
| 3.6 | 430 | 365 | 1.30 | SA67 R37 | |
| 4.1 | 375 | 319 | 1.50 | SAF67 R37 | |
| 4.6 | 330 | 281 | 1.75 | | |
| 4.4 | 340 | 294 | 0.90 | | 4P |
| 4.8 | 315 | 269 | 0.95 | | |
| 5.7 | 270 | 229 | 1.10 | S57 R17 | |
| 6.4 | 245 | 204 | 1.25 | SF57 R17 | |
| 6.9 | 225 | 187 | 1.35 | SA57 R17 | |
| 7.9 | 198 | 165 | 1.50 | SAF57 R17 | |
| 9.9 | 159 | 131 | 1.90 | | |
| 3.1 | 435 | 217.41 | 1.30 | S67 | 8P |
| 3.6 | 390 | 190.11 | 1.45 | SF67 | |
| 3.8 | 370 | 180.60 | 1.50 | SA67 | |
| 4.3 | 330 | 158.45 | 1.70 | SAF67 | |
| 4.1 | 350 | 217.41 | 1.60 | S67 | 6P |
| 4.6 | 310 | 190.11 | 1.80 | SF67 | |
| 4.9 | 295 | 180.60 | 1.90 | SA67 | |
| 5.6 | 265 | 158.45 | 2.10 | SAF67 | |
| 6.0 | 245 | 217.41 | 2.1 | | 4P |
| 6.8 | 220 | 190.11 | 2.4 | S67 | |
| 7.2 | 210 | 180.60 | 2.5 | SF67 | |
| 8.2 | 187 | 158.45 | 2.8 | SA67 | |
| 9.7 | 161 | 134.40 | 3.2 | SAF67 | |
| 11 | 147 | 121.33 | 3.5 | | |
| 12 | 131 | 106.75 | 4.0 | | |
| 4.4 | 305 | 201.00 | 1.00 | | 6P |
| 4.8 | 285 | 184.80 | 1.05 | S57 | |
| 5.6 | 245 | 158.12 | 1.20 | SF57 | |
| 6.4 | 220 | 137.05 | 1.35 | SA57 | |
| 6.9 | 205 | 128.10 | 1.45 | SAF57 | |
| 6.5 | 215 | 201.00 | 1.35 | | 4P |
| 7.0 | 200 | 184.80 | 1.45 | | |
| 8.2 | 176 | 158.12 | 1.7 | S57 | |
| 9.5 | 155 | 137.05 | 1.9 | SF57 | |
| 10 | 146 | 128.10 | 2.0 | SA57 | |
| 12 | 129 | 110.73 | 2.3 | SAF57 | |
| 14 | 111 | 94.08 | 2.7 | | |
| 15 | 101 | 84.00 | 2.9 | | |
| 6.5 | 210 | 201.00 | 0.80 | | 4P |
| 7.0 | 195 | 184.80 | 0.85 | | |
| 8.2 | 170 | 158.12 | 1.00 | | |
| 9.5 | 150 | 137.05 | 1.10 | S47 | |
| 10 | 141 | 128.10 | 1.20 | SF47 | |
| 12 | 124 | 110.73 | 1.35 | SA47 | |
| 14 | 108 | 94.08 | 1.55 | SAF47 | |
| 15 | 98 | 84.00 | 1.70 | | |
| 18 | 85 | 71.75 | 1.95 | | |
| 19 | 97 | 69.39 | 1.60 | | |

| 輸出轉速 Output speed (r/min) | 輸出轉矩 Output torque (N.M) | 傳動比 Ratio (i) | 使用係數 Service factor | 機型 Type | 馬達級數 Motor pole |
|---|---|---|---|---|---|
| 0.25 KW | | | | | |
| 19 | 80 | 67.20 | 2.1 | S47 | 4P |
| 20 | 90 | 63.80 | 1.7 | SF47 | |
| 24 | 78 | 54.59 | 2.0 | SA47 | |
| 27 | 68 | 47.32 | 2.3 | SAF47 | |
| 13 | 108 | 98.80 | 0.80 | | 4P |
| 15 | 96 | 86.36 | 0.90 | | |
| 16 | 91 | 80.96 | 0.95 | | |
| 18 | 81 | 71.44 | 1.05 | | |
| 21 | 73 | 63.33 | 1.10 | | |
| 23 | 78 | 55.93 | 1.05 | | |
| 25 | 72 | 51.30 | 1.15 | | |
| 30 | 62 | 43.68 | 1.30 | | |
| 35 | 54 | 37.66 | 1.45 | | |
| 37 | 51 | 35.10 | 1.55 | | |
| 42 | 45 | 30.68 | 1.70 | S37 | |
| 45 | 42 | 28.76 | 1.80 | SF37 | |
| 21 | 37 | 25.38 | 2.00 | SA37 | |
| 58 | 33 | 22.50 | 2.20 | SAF37 | |
| 65 | 32 | 19.89 | 1.65 | | |
| 71 | 29 | 18.24 | 1.80 | | |
| 84 | 25 | 15.53 | 2.00 | | |
| 97 | 22 | 13.39 | 2.30 | | |
| 104 | 20 | 12.48 | 2.40 | | |
| 119 | 18 | 10.91 | 2.70 | | |
| 127 | 19 | 10.23 | 2.80 | | |
| 144 | 15 | 9.02 | 3.10 | | |
| 163 | 13 | 8.00 | 3.40 | | |
| 191 | 11 | 6.80 | 3.80 | | |
| 92 | 21 | 28.76 | 3.00 | | 2P |
| 105 | 19 | 25.38 | 3.30 | | |
| 118 | 17 | 22.50 | 3.40 | S37 | |
| 134 | 16 | 19.89 | 2.80 | SF37 | |
| 146 | 15 | 18.24 | 3.00 | SA37 | |
| 171 | 13 | 15.53 | 3.40 | SAF37 | |
| 199 | 11 | 13.39 | 3.80 | | |
| 213 | 10 | 12.48 | 4.00 | | |
| 0.37 KW | | | | | |
| 0.67 | 2810 | 2054 | 0.9 | | 4P |
| 0.76 | 2490 | 1824 | 1.0 | S87 R57 | |
| 0.85 | 2230 | 1631 | 1.1 | SF87 R57 | |
| 1.5 | 1320 | 930 | 1.9 | SA87 R57 | |
| 1.7 | 1190 | 831 | 2.1 | SAF87 R57 | |
| 1.9 | 1290 | 714 | 0.95 | | 4P |
| 2.2 | 1150 | 637 | 1.1 | S77 R37 | |
| 2.4 | 1040 | 574 | 1.2 | SF37 R37 | |
| 2.8 | 900 | 499 | 1.4 | SA37 R37 | |
| 3.2 | 785 | 438 | 1.6 | SAF37 R37 | |
| 3.5 | 700 | 389 | 1.8 | | |
| 3.8 | 615 | 365 | 0.95 | S67 R37 | 4P |
| 4.3 | 535 | 319 | 1.05 | SF67 R37 | |
| 4.9 | 470 | 281 | 1.20 | SA67 R37 | |
| 5.6 | 425 | 246 | 1.35 | SAF67 R37 | |
| 2.4 | 980 | 288.00 | 2.5 | S87 | 8P |
| 2.6 | 890 | 258.18 | 2.8 | SF87 | |
| 3.1 | 775 | 222.40 | 3.2 | SA87 | |
| | | | | SAF87 | |
| 3.0 | 735 | 225.26 | 1.75 | S77 | 6P |
| 3.2 | 700 | 214.00 | 1.80 | SF77 | |
| 3.6 | 630 | 189.09 | 2.00 | SA77 | |
| 4.2 | 545 | 161.60 | 2.30 | SAF77 | |
| 4.1 | 505 | 217.41 | 1.10 | S67 | 6P |
| 4.7 | 450 | 190.11 | 1.25 | SF67 | |
| 5.0 | 430 | 180.60 | 1.30 | SA67 | |
| 5.7 | 380 | 158.45 | 1.45 | SAF67 | |

| 輸出轉速 Output speed (r/min) | 輸出轉矩 Output torque (N.M) | 傳動比 Ratio (i) | 使用係數 Service factor | 機型 Type | 馬達級數 Motor pole |
|---|---|---|---|---|---|
| 0.37 KW | | | | | |
| 6.3 | 345 | 217.41 | 1.50 | | 4P |
| 7.3 | 310 | 190.11 | 1.70 | S67 | |
| 7.6 | 295 | 180.60 | 1.75 | SF67 | |
| 8.7 | 260 | 158.45 | 2.00 | SA67 | |
| 10 | 225 | 134.40 | 2.30 | SAF67 | |
| 11 | 205 | 121.33 | 2.50 | | |
| 5.7 | 360 | 158.12 | 0.80 | | 6P |
| 6.6 | 315 | 137.05 | 0.95 | S57 | |
| 7.0 | 300 | 128.10 | 1.00 | SF57 | |
| 8.1 | 265 | 110.73 | 1.10 | SA57 | |
| 9.6 | 230 | 94.08 | 1.30 | SAF57 | |
| 11 | 205 | 84.00 | 1.45 | | |
| 6.9 | 305 | 201.00 | 0.95 | | 4P |
| 7.5 | 285 | 184.80 | 1.05 | | |
| 8.7 | 245 | 158.12 | 1.20 | | |
| 10 | 220 | 137.05 | 1.35 | | |
| 11 | 205 | 128.10 | 1.45 | S57 | |
| 12 | 180 | 110.73 | 1.65 | SF57 | |
| 15 | 156 | 94.08 | 1.90 | SA57 | |
| 16 | 141 | 84.00 | 2.10 | SAF57 | |
| 19 | 122 | 71.75 | 2.40 | | |
| 20 | 139 | 69.39 | 1.75 | | |
| 21 | 115 | 67.20 | 2.50 | | |
| 22 | 128 | 63.80 | 1.90 | | |
| 10 | 210 | 137.05 | 0.80 | | 4P |
| 11 | 199 | 128.10 | 0.85 | | |
| 12 | 175 | 110.73 | 0.95 | | |
| 15 | 151 | 94.08 | 1.10 | | |
| 16 | 137 | 84.00 | 1.20 | | |
| 19 | 119 | 71.75 | 1.40 | | |
| 20 | 136 | 69.39 | 1.15 | | |
| 21 | 112 | 67.20 | 1.50 | | |
| 22 | 126 | 63.80 | 1.25 | S47 | |
| 25 | 109 | 54.59 | 1.40 | SF47 | |
| 29 | 96 | 47.32 | 1.60 | SA47 | |
| 31 | 90 | 44.22 | 1.75 | SAF47 | |
| 36 | 78 | 38.23 | 2.00 | | |
| 42 | 67 | 32.48 | 2.30 | | |
| 48 | 60 | 29.00 | 2.60 | | |
| 56 | 52 | 24.77 | 3.00 | | |
| 59 | 49 | 23.20 | 3.10 | | |
| 68 | 46 | 20.33 | 2.40 | | |
| 78 | 40 | 17.62 | 2.80 | | |
| 84 | 37 | 16.47 | 3.00 | | |
| 22 | 103 | 63.33 | 0.80 | | 4P |
| 27 | 101 | 51.30 | 0.80 | | |
| 32 | 87 | 43.68 | 0.95 | | |
| 37 | 73 | 37.66 | 1.05 | | |
| 39 | 71 | 35.10 | 1.10 | | |
| 45 | 63 | 30.68 | 1.20 | | |
| 48 | 59 | 28.76 | 1.30 | | |
| 54 | 52 | 25.38 | 1.40 | | |
| 61 | 47 | 22.50 | 1.55 | S37 | |
| 69 | 44 | 19.89 | 1.20 | SF37 | |
| 76 | 41 | 18.24 | 1.30 | SA37 | |
| 89 | 35 | 15.53 | 1.45 | SAF37 | |
| 103 | 30 | 13.39 | 1.60 | | |
| 111 | 28 | 12.48 | 1.70 | | |
| 127 | 25 | 10.91 | 1.95 | | |
| 135 | 23 | 10.23 | 2.00 | | |
| 153 | 21 | 9.02 | 2.20 | | |
| 173 | 18 | 8.00 | 2.50 | | |
| 203 | 16 | 6.80 | 2.70 | | |

# 斜齒蝸輪減速機 Helical Worm Gear Reducer

| 輸出轉速 Output speed (r/min) | 輸出轉矩 Output torque (N.M) | 傳動比 Ratio (i) | 使用係數 Service factor | 機型 Type | 馬達級數 Motor pole |
|---|---|---|---|---|---|
| 0.37 KW | | | | | |
| 104 | 28 | 25.38 | 2.20 | | |
| 118 | 25 | 22.50 | 2.30 | | |
| 133 | 24 | 19.89 | 1.85 | | |
| 145 | 22 | 18.24 | 2.00 | S37 | |
| 171 | 19 | 15.53 | 2.30 | SF37 | 2P |
| 198 | 16 | 13.39 | 2.50 | SA37 | |
| 212 | 15 | 12.48 | 2.70 | SAF37 | |
| 243 | 13 | 10.91 | 3.00 | | |
| 259 | 12 | 10.23 | 3.10 | | |
| 294 | 11 | 9.02 | 3.30 | | |
| 0.55 KW | | | | | |
| 1.0 | 2810 | 1332 | 0.90 | | |
| 1.1 | 2540 | 1191 | 1.00 | | |
| 1.3 | 2210 | 1032 | 1.15 | S87 R57 | |
| 1.5 | 2040 | 930 | 1.25 | SF87 R57 | 4P |
| 1.6 | 1840 | 831 | 1.35 | SA87 R57 | |
| 1.9 | 1600 | 719 | 1.55 | SAF87 R57 | |
| 2.2 | 1400 | 624 | 1.80 | | |
| 2.4 | 1270 | 558 | 1.95 | | |
| 3.1 | 1010 | 435 | 2.40 | | |
| 2.7 | 1380 | 499 | 0.90 | | |
| 3.1 | 1210 | 438 | 1.05 | S77 R37 | |
| 3.5 | 1070 | 389 | 1.15 | SF77 R37 | 4P |
| 4.2 | 910 | 327 | 1.35 | SA77 R37 | |
| 4.7 | 820 | 289 | 1.50 | SAF77 R37 | |
| 5.4 | 710 | 250 | 1.75 | | |
| 5.5 | 650 | 246 | 0.90 | S67 R37 | |
| 6.2 | 580 | 221 | 1.00 | SF67 R37 | 4P |
| 6.9 | 530 | 198 | 1.10 | SA67 R37 | |
| 8.1 | 455 | 168 | 1.25 | SAF67 R37 | |
| 2.4 | 1450 | 288.00 | 1.70 | S87 | |
| 2.6 | 1320 | 258.18 | 1.85 | SF87 | 8P |
| 3.1 | 1150 | 222.40 | 2.10 | SA87 | |
| | | | | SAF87 | |
| 3.1 | 1130 | 288.00 | 2.20 | S87 | |
| 3.5 | 1020 | 258.18 | 2.40 | SF87 | 6P |
| 4.1 | 900 | 222.40 | 2.70 | SA87 | |
| 4.4 | 820 | 202.96 | 2.90 | SAF87 | |
| 3.0 | 1090 | 225.26 | 1.15 | S77 | |
| 3.2 | 1040 | 214.00 | 1.20 | SF77 | 8P |
| 3.6 | 930 | 189.09 | 1.35 | SA77 | |
| 4.2 | 810 | 161.60 | 1.55 | SAF77 | |
| 3.5 | 960 | 256.47 | 1.35 | | |
| 4.0 | 850 | 225.26 | 1.50 | S77 | |
| 4.2 | 810 | 214.00 | 1.55 | SF77 | 6P |
| 4.8 | 730 | 189.09 | 1.75 | SA77 | |
| 5.6 | 635 | 161.60 | 2.00 | SAF77 | |
| 5.3 | 660 | 256.47 | 1.90 | S77 | |
| 6.0 | 590 | 225.26 | 2.20 | SF77 | 4P |
| 6.4 | 560 | 214.00 | 2.30 | SA77 | |
| 7.2 | 505 | 189.09 | 2.50 | SAF77 | |
| 6.3 | 520 | 217.41 | 1.00 | | |
| 7.2 | 465 | 190.11 | 1.10 | | |
| 7.5 | 445 | 180.60 | 1.15 | | |
| 8.6 | 395 | 158.45 | 1.30 | S67 | |
| 10 | 340 | 134.40 | 1.55 | SF67 | 4P |
| 11 | 310 | 121.33 | 1.65 | SA67 | |
| 13 | 275 | 106.75 | 1.85 | SAF67 | |
| 13 | 265 | 100.80 | 1.95 | | |
| 16 | 230 | 85.83 | 2.3 | | |
| 18 | 230 | 75.06 | 2.1 | | |
| 21 | 205 | 65.63 | 2.3 | | |

| 輸出轉速 Output speed (r/min) | 輸出轉矩 Output torque (N.M) | 傳動比 Ratio (i) | 使用係數 Service factor | 機型 Type | 馬達級數 Motor pole |
|---|---|---|---|---|---|
| 0.55 KW | | | | | |
| 9.6 | 340 | 94.08 | 0.85 | | |
| 11 | 305 | 84.00 | 0.95 | | |
| 13 | 265 | 71.75 | 1.10 | S57 | |
| 13 | 250 | 67.20 | 1.15 | SF57 | 6P |
| 16 | 245 | 54.59 | 1.10 | SA57 | |
| 19 | 215 | 47.32 | 1.25 | SAF57 | |
| 20 | 200 | 44.22 | 1.35 | | |
| 24 | 176 | 38.23 | 1.55 | | |
| 8.6 | 370 | 158.12 | 0.80 | | |
| 9.9 | 330 | 137.05 | 0.90 | | |
| 11 | 310 | 128.10 | 0.95 | | |
| 12 | 270 | 110.73 | 1.10 | | |
| 14 | 235 | 94.08 | 1.25 | | |
| 16 | 210 | 84.00 | 1.40 | | |
| 19 | 184 | 71.72 | 1.55 | S57 | |
| 20 | 174 | 67.20 | 1.65 | SF57 | 4P |
| 25 | 167 | 54.59 | 1.45 | SA57 | |
| 29 | 146 | 47.32 | 1.70 | SAF57 | |
| 31 | 137 | 44.22 | 1.80 | | |
| 36 | 120 | 38.23 | 2.00 | | |
| 42 | 103 | 32.48 | 2.40 | | |
| 47 | 92 | 29.00 | 2.70 | | |
| 55 | 79 | 24.77 | 3.10 | | |
| 59 | 75 | 23.20 | 3.30 | | |
| 67 | 69 | 20.33 | 2.40 | | |
| 16 | 205 | 84.00 | 0.80 | | |
| 19 | 179 | 71.75 | 0.95 | | |
| 20 | 169 | 67.20 | 1.00 | | |
| 25 | 165 | 54.59 | 0.95 | | |
| 29 | 144 | 47.32 | 1.10 | | |
| 31 | 135 | 44.22 | 1.15 | | |
| 36 | 118 | 38.23 | 1.30 | | |
| 42 | 101 | 32.48 | 1.55 | S47 | |
| 47 | 91 | 29.00 | 1.70 | SF47 | 4P |
| 55 | 78 | 24.77 | 2.00 | SA47 | |
| 59 | 74 | 23.20 | 2.10 | SAF47 | |
| 67 | 69 | 20.33 | 1.30 | | |
| 77 | 60 | 17.62 | 1.85 | | |
| 83 | 56 | 16.47 | 1.95 | | |
| 96 | 49 | 14.24 | 2.20 | | |
| 112 | 42 | 12.10 | 2.60 | | |
| 126 | 37 | 10.80 | 2.90 | | |
| 147 | 32 | 9.23 | 3.40 | | |
| 44 | 94 | 30.68 | 0.80 | | |
| 47 | 89 | 28.76 | 0.85 | | |
| 54 | 79 | 25.38 | 0.95 | | |
| 60 | 70 | 22.50 | 1.05 | | |
| 71 | 60 | 19.13 | 1.20 | S37 | |
| 88 | 53 | 15.53 | 0.95 | SF37 | 4P |
| 102 | 46 | 13.39 | 1.10 | SA37 | |
| 109 | 43 | 12.48 | 1.15 | SAF37 | |
| 125 | 37 | 10.91 | 1.30 | | |
| 133 | 35 | 10.23 | 1.35 | | |
| 151 | 31 | 9.02 | 1.50 | | |
| 170 | 28 | 8.00 | 1.60 | | |
| 200 | 24 | 6.80 | 1.80 | | |
| 94 | 46 | 28.76 | 1.40 | | |
| 106 | 41 | 25.38 | 1.50 | | |
| 120 | 37 | 22.50 | 1.55 | S37 | |
| 136 | 34 | 19.89 | 1.30 | SF37 | 2P |
| 148 | 32 | 18.24 | 1.40 | SA37 | |
| 174 | 27 | 15.53 | 1.55 | SAF37 | |
| 202 | 24 | 13.39 | 1.75 | | |
| 216 | 22 | 12.48 | 1.85 | | |
| 248 | 19 | 10.91 | 2.00 | | |

| 輸出轉速 Output speed (r/min) | 輸出轉矩 Output torque (N.M) | 傳動比 Ratio (i) | 使用係數 Service factor | 機型 Type | 馬達級數 Motor pole |
|---|---|---|---|---|---|
| 0.55 KW | | | | | |
| 264 | 18 | 10.23 | 2.1 | S37 | 2P |
| 299 | 16 | 9.02 | 2.2 | SF37 | |
| 338 | 14 | 8.00 | 2.5 | SA37 | |
| 397 | 12 | 6.80 | 2.4 | SAF37 | |
| 0.75 KW | | | | | |
| 1.1 | 4840 | 1223 | 0.85 | | 4P |
| 1.3 | 4240 | 1070 | 1.00 | | |
| 1.5 | 3650 | 928 | 1.15 | S97 R57 | |
| 1.7 | 3230 | 824 | 1.30 | SF97 R57 | |
| 1.9 | 2300 | 714 | 1.85 | SA97 R57 | |
| 2.2 | 2450 | 626 | 1.70 | SAF97 R57 | |
| 2.6 | 2110 | 538 | 2.00 | | |
| 2.8 | 1900 | 484 | 2.20 | | |
| 1.3 | 3030 | 1032 | 0.85 | | 4P |
| 1.5 | 2780 | 930 | 0.90 | | |
| 1.7 | 2510 | 831 | 1.00 | S87 R57 | |
| 1.9 | 2190 | 719 | 1.15 | SF87 R57 | |
| 2.2 | 1920 | 624 | 1.30 | SA87 R57 | |
| 2.5 | 1730 | 558 | 1.45 | SAF87 R57 | |
| 3.2 | 1390 | 435 | 1.75 | | |
| 4.3 | 1060 | 323 | 2.30 | | |
| 4.2 | 1240 | 327 | 1.00 | S77 R37 | 4P |
| 4.8 | 1110 | 289 | 1.10 | SF77 R37 | |
| 5.5 | 960 | 250 | 1.30 | SA77 R37 | |
| 6.3 | 850 | 219 | 1.45 | SAF77 R37 | |
| | | | | S97 | 8P |
| 2.4 | 2040 | 286.40 | 2.1 | SF97 | |
| 2.6 | 1890 | 262.22 | 2.2 | SA97 | |
| 3.0 | 1690 | 231.67 | 2.5 | SAF97 | |
| 3.1 | 1540 | 288.00 | 1.60 | S87 | 6P |
| 3.5 | 1400 | 258.18 | 1.75 | SF87 | |
| 4.1 | 1220 | 222.40 | 1.95 | SA87 | |
| 4.4 | 1120 | 202.96 | 2.10 | SAF87 | |
| 4.8 | 1050 | 288.00 | 2.2 | S87 | 4P |
| 5.3 | 950 | 258.18 | 2.4 | SF87 | |
| 6.2 | 830 | 222.40 | 2.8 | SA87 | |
| 6.8 | 765 | 202.96 | 3.0 | SAF87 | |
| 4.0 | 1160 | 225.26 | 1.10 | S77 | 6P |
| 4.2 | 1110 | 214.00 | 1.15 | SF77 | |
| 4.8 | 990 | 189.09 | 1.30 | SA77 | |
| 5.6 | 860 | 161.60 | 1.45 | SAF77 | |
| 5.4 | 890 | 256.47 | 1.45 | | 4P |
| 6.1 | 790 | 225.26 | 1.6 | | |
| 6.4 | 755 | 214.00 | 1.7 | | |
| 7.3 | 675 | 189.09 | 1.9 | S77 | |
| 8.5 | 585 | 161.60 | 2.2 | SF77 | |
| 9.3 | 545 | 148.15 | 2.3 | SA77 | |
| 11 | 480 | 130.00 | 2.5 | SAF77 | |
| 11 | 460 | 123.20 | 2.6 | | |
| 13 | 405 | 107.83 | 2.9 | | |
| 5.4 | 890 | 256.47 | 1.45 | | 4P |
| 6.1 | 790 | 225.26 | 1.6 | | |
| 6.4 | 755 | 214.00 | 1.7 | | |
| 7.3 | 675 | 189.09 | 1.9 | S77 | |
| 8.5 | 585 | 161.60 | 2.2 | SF77 | |
| 9.3 | 545 | 148.15 | 2.3 | SA77 | |
| 11 | 480 | 130.00 | 2.5 | SAF77 | |
| 11 | 460 | 123.20 | 2.6 | | |
| 13 | 405 | 107.83 | 2.9 | | |
| 7.3 | 625 | 190.11 | 0.85 | S67 | 4P |
| 7.6 | 595 | 180.60 | 0.85 | SF67 | |
| 8.7 | 530 | 158.45 | 1.00 | SA67 | |
| | | | | SAF67 | |

| 輸出轉速 Output speed (r/min) | 輸出轉矩 Output torque (N.M) | 傳動比 Ratio (i) | 使用係數 Service factor | 機型 Type | 馬達級數 Motor pole |
|---|---|---|---|---|---|
| 0.75 KW | | | | | |
| 10 | 460 | 134.40 | 1.15 | | 4P |
| 11 | 420 | 121.33 | 1.25 | | |
| 13 | 375 | 106.75 | 1.40 | | |
| 14 | 355 | 100.80 | 1.40 | S67 | |
| 16 | 305 | 85.83 | 1.70 | SF67 | |
| 18 | 310 | 75.06 | 1.55 | SA67 | |
| 21 | 275 | 65.63 | 1.75 | SAF67 | |
| 22 | 260 | 62.35 | 1.85 | | |
| 25 | 230 | 54.70 | 2.10 | | |
| 30 | 198 | 46.40 | 2.40 | | |
| 13 | 365 | 71.75 | 0.80 | | 6P |
| 13 | 345 | 67.20 | 0.85 | S57 | |
| 16 | 295 | 56.61 | 1.00 | SF57 | |
| 19 | 295 | 47.32 | 0.90 | SA57 | |
| 20 | 275 | 44.20 | 1.00 | SAF57 | |
| 12 | 365 | 110.73 | 0.80 | | 4P |
| 15 | 315 | 94.08 | 0.95 | | |
| 16 | 285 | 84.00 | 1.05 | | |
| 19 | 250 | 71.75 | 1.15 | | |
| 21 | 235 | 67.20 | 1.20 | | |
| 25 | 225 | 54.59 | 1.10 | | |
| 29 | 197 | 47.32 | 1.20 | S57 | |
| 31 | 185 | 44.22 | 1.35 | SF57 | |
| 36 | 167 | 38.23 | 1.50 | SA57 | |
| 42 | 138 | 32.48 | 1.80 | SAF57 | |
| 48 | 124 | 29.00 | 2.00 | | |
| 56 | 107 | 24.77 | 2.30 | | |
| 59 | 100 | 23.20 | 2.50 | | |
| 68 | 93 | 20.33 | 1.80 | | |
| 78 | 81 | 17.62 | 2.10 | | |
| 84 | 76 | 16.47 | 2.20 | | |
| 97 | 66 | 14.24 | 2.60 | | |
| 29 | 194 | 47.32 | 0.80 | | 4P |
| 31 | 182 | 44.22 | 0.85 | | |
| 36 | 159 | 38.23 | 1.00 | | |
| 42 | 136 | 32.48 | 1.15 | | |
| 48 | 122 | 29.00 | 1.25 | | |
| 56 | 106 | 24.77 | 1.45 | | |
| 59 | 99 | 23.20 | 1.55 | S47 | |
| 68 | 93 | 20.33 | 1.20 | SF47 | |
| 78 | 81 | 17.62 | 1.35 | SA47 | |
| 84 | 76 | 16.47 | 1.45 | SAF47 | |
| 97 | 66 | 14.24 | 1.65 | | |
| 114 | 56 | 12.10 | 1.95 | | |
| 128 | 50 | 10.80 | 2.20 | | |
| 150 | 43 | 9.23 | 2.50 | | |
| 160 | 41 | 8.64 | 2.70 | | |
| 190 | 34 | 7.28 | 3.00 | | |
| 72 | 81 | 19.13 | 0.85 | | 4P |
| 111 | 57 | 12.48 | 0.85 | | |
| 127 | 50 | 10.91 | 0.95 | S37 | |
| 135 | 47 | 10.23 | 1.00 | SF37 | |
| 153 | 42 | 9.02 | 1.10 | SA37 | |
| 173 | 37 | 8.00 | 1.20 | SAF37 | |
| 203 | 32 | 6.80 | 1.35 | | |
| 141 | 43 | 19.13 | 1.05 | | 2P |
| 174 | 37 | 15.53 | 1.15 | | |
| 202 | 32 | 13.39 | 1.30 | | |
| 216 | 30 | 12.48 | 1.35 | S37 | |
| 248 | 26 | 10.91 | 1.50 | SF37 | |
| 264 | 25 | 10.23 | 1.55 | SA37 | |
| 299 | 22 | 9.02 | 1.65 | SAF37 | |
| 338 | 19 | 8.00 | 1.80 | | |
| 397 | 17 | 6.80 | 1.75 | | |

# 斜齒蝸輪減速機 Helical Worm Gear Reducer

| 輸出轉速 Output speed (r/min) | 輸出轉矩 Output torque (N.M) | 傳動比 Ratio (i) | 使用係數 Service factor | 機型 Type | 馬達級數 Motor pole |
|---|---|---|---|---|---|
| 1.1 KW | | | | | |
| 1.7 | 4720 | 824 | 0.90 | | |
| 2.0 | 3370 | 714 | 1.25 | S97 R57 | |
| 2.2 | 3590 | 626 | 1.15 | SF97 R57 | 4P |
| 2.6 | 3090 | 538 | 1.35 | SA97 R57 | |
| 2.9 | 2790 | 484 | 1.50 | SAF97 R57 | |
| 3.3 | 2430 | 420 | 1.75 | | |
| 2.2 | 2820 | 624 | 0.90 | | |
| 2.5 | 2550 | 558 | 1.00 | | |
| 2.9 | 2240 | 485 | 1.10 | | |
| 3.2 | 2040 | 435 | 1.20 | S87 R57 | |
| 3.7 | 1790 | 378 | 1.35 | SF87 R57 | 4P |
| 4.3 | 1560 | 323 | 1.55 | SA87 R57 | |
| 5.0 | 1370 | 281 | 1.75 | SAF87 R57 | |
| 5.5 | 1460 | 255 | 1.35 | | |
| 6.3 | 1280 | 222 | 1.55 | | |
| 6.8 | 1200 | 205 | 1.65 | | |
| | | | | S77 R37 | |
| | | | | SF77 R37 | 4P |
| 6.4 | 1240 | 219 | 1.00 | SA77 R37 | |
| | | | | SAF77 R37 | |
| 2.4 | 3030 | 286.40 | 1.40 | S97 | |
| 2.6 | 2800 | 262.22 | 1.50 | SF97 | 8P |
| 2.9 | 2500 | 231.67 | 1.70 | SA97 | |
| 3.5 | 2160 | 196.52 | 1.95 | SAF97 | |
| | | | | S97 | |
| 3.2 | 2310 | 286.40 | 1.80 | SF97 | 6P |
| 3.5 | 2130 | 262.22 | 1.95 | SA97 | |
| 4.0 | 1900 | 231.67 | 2.20 | SAF97 | |
| 3.2 | 2220 | 288.00 | 1.10 | S87 | |
| 3.6 | 2010 | 258.18 | 1.20 | SF87 | 6P |
| 4.1 | 1760 | 222.40 | 1.35 | SA87 | |
| 4.5 | 1620 | 202.96 | 1.45 | SAF87 | |
| 4.9 | 1520 | 288.00 | 1.50 | | |
| 5.4 | 1370 | 258.18 | 1.65 | S87 | |
| 6.3 | 1200 | 222.40 | 1.90 | SF87 | 4P |
| 6.9 | 1100 | 202.96 | 2.00 | SA87 | |
| 7.8 | 990 | 180.00 | 2.20 | SAF87 | |
| 9.2 | 840 | 151.30 | 2.50 | | |
| 6.2 | 1150 | 225.26 | 1.10 | | |
| 6.5 | 1100 | 214.00 | 1.15 | | |
| 7.4 | 980 | 189.09 | 1.30 | | |
| 8.7 | 850 | 161.60 | 1.50 | S77 | |
| 9.4 | 785 | 148.15 | 1.60 | SF77 | 4P |
| 11 | 695 | 130.00 | 1.75 | SA77 | |
| 11 | 665 | 123.20 | 1.80 | SAF77 | |
| 13 | 585 | 107.83 | 2.00 | | |
| 14 | 535 | 97.14 | 2.10 | | |
| 16 | 470 | 85.22 | 2.30 | | |
| 12 | 605 | 121.33 | 0.85 | | |
| 13 | 540 | 106.75 | 0.95 | | |
| 14 | 515 | 100.80 | 1.00 | | |
| 16 | 445 | 85.83 | 1.15 | | |
| 18 | 405 | 78.00 | 1.30 | | |
| 21 | 400 | 65.63 | 1.20 | S67 | |
| 22 | 380 | 62.35 | 1.25 | SF67 | 4P |
| 26 | 335 | 54.70 | 1.45 | SA67 | |
| 30 | 285 | 46.40 | 1.65 | SAF67 | |
| 33 | 260 | 41.89 | 1.85 | | |
| 38 | 230 | 36.85 | 2.10 | | |
| 40 | 220 | 34.80 | 2.20 | | |
| 47 | 187 | 29.63 | 2.60 | | |

| 輸出轉速 Output speed (r/min) | 輸出轉矩 Output torque (N.M) | 傳動比 Ratio (i) | 使用係數 Service factor | 機型 Type | 馬達級數 Motor pole |
|---|---|---|---|---|---|
| 1.1 KW | | | | | |
| 20 | 360 | 71.75 | 0.80 | | |
| 21 | 340 | 67.20 | 0.85 | | |
| 25 | 290 | 56.61 | 0.90 | | |
| 30 | 285 | 47.32 | 0.85 | | |
| 32 | 265 | 44.22 | 0.90 | | |
| 37 | 235 | 38.23 | 1.05 | | |
| 43 | 200 | 32.48 | 1.25 | S57 | |
| 48 | 179 | 29.00 | 1.35 | SF57 | 4P |
| 57 | 154 | 24.77 | 1.60 | SA57 | |
| 60 | 145 | 23.20 | 1.70 | SAF57 | |
| 72 | 123 | 19.45 | 1.75 | | |
| 79 | 117 | 17.62 | 1.45 | | |
| 85 | 110 | 16.47 | 1.55 | | |
| 98 | 95 | 14.24 | 1.75 | | |
| 116 | 82 | 12.10 | 2.10 | | |
| 130 | 73 | 10.80 | 2.30 | | |
| 152 | 63 | 9.23 | 2.70 | | |
| 48 | 177 | 29.00 | 0.90 | | |
| 57 | 153 | 24.77 | 1.00 | | |
| 60 | 143 | 23.20 | 1.05 | | |
| 72 | 122 | 19.54 | 1.20 | | |
| 79 | 117 | 17.62 | 0.95 | S47 | |
| 85 | 109 | 16.47 | 1.00 | SF47 | 4P |
| 98 | 95 | 14.24 | 1.15 | SA47 | |
| 116 | 81 | 12.10 | 1.35 | SAF47 | |
| 130 | 73 | 10.80 | 1.50 | | |
| 152 | 63 | 9.23 | 1.75 | | |
| 162 | 59 | 8.64 | 1.85 | | |
| 192 | 50 | 7.28 | 2.10 | | |
| | | | | S37 | |
| 175 | 54 | 8.0 | 0.85 | SF37 | 4P |
| 206 | 46 | 6.8 | 0.95 | SA37 | |
| | | | | SAF37 | |
| 202 | 47 | 13.39 | 0.85 | | |
| 216 | 44 | 12.48 | 0.90 | | |
| 248 | 39 | 10.91 | 1.00 | S37 | |
| 264 | 36 | 10.23 | 1.05 | SF37 | 2P |
| 299 | 32 | 9.02 | 1.10 | SA37 | |
| 338 | 28 | 8.00 | 1.25 | SAF37 | |
| 397 | 24 | 6.80 | 1.20 | | |
| 1.5 KW | | | | | |
| 2.0 | 4590 | 714 | 0.90 | | |
| 2.2 | 4890 | 626 | 0.85 | S97 R57 | |
| 2.6 | 4220 | 538 | 1.00 | SF97 R57 | 4P |
| 2.9 | 3810 | 484 | 1.10 | SA97 R57 | |
| 3.4 | 3310 | 420 | 1.25 | SAF97 R57 | |
| 3.8 | 2990 | 376 | 1.40 | | |
| 4.3 | 2630 | 327 | 1.60 | | |
| 2.9 | 3060 | 485 | 0.80 | | |
| 3.2 | 2780 | 435 | 0.90 | | |
| 3.7 | 2450 | 378 | 1.00 | S87 R57 | |
| 4.4 | 2130 | 323 | 1.15 | SF87 R57 | 4P |
| 5.0 | 1870 | 281 | 1.30 | SA87 R57 | |
| 5.5 | 2000 | 255 | 1.00 | SAF87 R57 | |
| 6.3 | 1750 | 222 | 1.15 | | |
| 6.9 | 1630 | 205 | 1.20 | | |
| 2.4 | 4030 | 286.40 | 1.05 | S97 | |
| 2.7 | 3720 | 262.22 | 1.15 | SF97 | 8P |
| 3.0 | 3330 | 231.67 | 1.25 | SA97 | |
| 3.6 | 2870 | 196.52 | 1.45 | SAF97 | |

| 輸出轉速 Output speed (r/min) | 輸出轉矩 Output torque (N.M) | 傳動比 Ratio (i) | 使用係數 Service factor | 機型 Type | 馬達級數 Motor pole |
|---|---|---|---|---|---|
| 1.5 KW | | | | | |
| 3.2 | 3150 | 286.40 | 1.35 | S97 | 6P |
| 3.5 | 2910 | 262.22 | 1.45 | SF97 | |
| 4.0 | 2600 | 231.67 | 1.60 | SA97 | |
| 4.7 | 2230 | 196.52 | 1.90 | SAF97 | |
| 4.9 | 2130 | 286.40 | 1.9 | S97 | 4P |
| 5.4 | 1970 | 262.22 | 2.0 | SF97 | |
| 6.1 | 1760 | 231.67 | 2.3 | SA97 | |
| 7.2 | 1510 | 196.52 | 2.7 | SAF97 | |
| 3.6 | 2740 | 258.18 | 0.9 | S87 | 6P |
| 4.1 | 2390 | 222.40 | 1.0 | SF87 | |
| 4.5 | 2200 | 202.96 | 1.1 | SA87 | |
| 5.1 | 1980 | 180.00 | 1.2 | SAF87 | |
| 4.9 | 2060 | 288.00 | 1.1 | | 4P |
| 5.5 | 1860 | 258.18 | 1.2 | | |
| 6.3 | 1630 | 222.40 | 1.4 | | |
| 6.9 | 1500 | 202.96 | 1.5 | S87 | |
| 7.8 | 1340 | 180.00 | 1.7 | SF87 | |
| 9.3 | 1140 | 151.30 | 1.9 | SA87 | |
| 10 | 1060 | 139.05 | 2.0 | SAF87 | |
| 11 | 950 | 123.48 | 2.2 | | |
| 13 | 850 | 110.40 | 2.3 | | |
| 14 | 770 | 99.26 | 2.5 | | |
| 7.5 | 1330 | 189.09 | 0.95 | | 4P |
| 8.7 | 1150 | 161.60 | 1.10 | | |
| 9.5 | 1060 | 148.15 | 1.15 | | |
| 11 | 940 | 130.00 | 1.30 | | |
| 11 | 900 | 123.20 | 1.35 | | |
| 13 | 795 | 107.83 | 1.45 | | |
| 15 | 725 | 97.14 | 1.60 | S77 | |
| 17 | 640 | 85.22 | 1.70 | SF77 | |
| 19 | 650 | 75.09 | 1.70 | SA77 | |
| 20 | 620 | 71.33 | 1.80 | SAF77 | |
| 21 | 510 | 66.67 | 2.00 | | |
| 22 | 550 | 63.03 | 2.00 | | |
| 25 | 440 | 56.92 | 2.30 | | |
| 26 | 470 | 53.87 | 2.30 | | |
| 29 | 435 | 49.38 | 2.50 | | |
| 33 | 385 | 43.33 | 2.90 | | |
| 16 | 600 | 85.83 | 0.85 | | 4P |
| 18 | 550 | 78.00 | 0.95 | | |
| 21 | 540 | 65.63 | 0.90 | | |
| 23 | 515 | 62.35 | 0.95 | | |
| 26 | 455 | 54.70 | 1.05 | | |
| 30 | 390 | 46.40 | 1.25 | | |
| 34 | 355 | 41.89 | 1.36 | S67 | |
| 38 | 310 | 36.85 | 1.55 | SF67 | |
| 41 | 295 | 34.80 | 1.60 | SA67 | |
| 48 | 255 | 29.63 | 1.90 | SAF67 | |
| 52 | 230 | 26.93 | 2.10 | | |
| 58 | 220 | 24.44 | 1.55 | | |
| 61 | 210 | 23.22 | 1.60 | | |
| 69 | 186 | 20.37 | 1.85 | | |
| 82 | 159 | 17.28 | 2.10 | | |
| 90 | 144 | 15.60 | 2.40 | | |
| 103 | 127 | 13.73 | 2.70 | | |
| 43 | 270 | 32.48 | 0.90 | | 4P |
| 49 | 245 | 29.00 | 1.00 | | |
| 57 | 210 | 24.77 | 1.15 | S57 | |
| 61 | 196 | 23.20 | 1.25 | SF57 | |
| 72 | 167 | 19.54 | 1.30 | SA57 | |
| 80 | 159 | 17.62 | 1.05 | SAF57 | |
| 86 | 149 | 16.47 | 1.15 | | |

| 輸出轉速 Output speed (r/min) | 輸出轉矩 Output torque (N.M) | 傳動比 Ratio (i) | 使用係數 Service factor | 機型 Type | 馬達級數 Motor pole |
|---|---|---|---|---|---|
| 1.5 KW | | | | | |
| 99 | 129 | 14.24 | 1.30 | S57 | 4P |
| 117 | 110 | 12.10 | 1.55 | SF57 | |
| 131 | 99 | 10.80 | 1.70 | SA57 | |
| 153 | 85 | 9.23 | 2.00 | SAF57 | |
| 99 | 129 | 14.24 | 0.85 | | 4P |
| 117 | 110 | 12.10 | 1.00 | S47 | |
| 131 | 99 | 10.80 | 1.10 | SF47 | |
| 153 | 85 | 9.23 | 1.30 | SA47 | |
| 163 | 79 | 8.64 | 1.35 | SAF47 | |
| 194 | 67 | 7.28 | 1.55 | | |
| | | | | S37 | 2P |
| 299 | 44 | 9.02 | 0.85 | SF37 | |
| 338 | 39 | 8.00 | 0.90 | SA37 | |
| 397 | 33 | 6.80 | 0.90 | SAF37 | |
| 2.2 KW | | | | | |
| 3.4 | 4900 | 420 | 0.85 | | 4P |
| 3.8 | 4410 | 376 | 0.95 | S97 R57 | |
| 4.3 | 3870 | 327 | 1.10 | SF97 R57 | |
| 4.9 | 3420 | 287 | 1.25 | SA97 R57 | |
| 5.6 | 3000 | 252 | 1.40 | SAF97 R57 | |
| 3.3 | 4530 | 286.40 | 0.95 | S97 | 6P |
| 3.6 | 4180 | 262.22 | 1.00 | SF97 | |
| 4.1 | 3730 | 231.67 | 1.15 | SA97 | |
| 4.8 | 3210 | 196.52 | 1.30 | SAF97 | |
| 4.9 | 3130 | 286.40 | 1.30 | | 4P |
| 5.4 | 2890 | 262.22 | 1.40 | | |
| 6.1 | 2570 | 231.67 | 1.55 | | |
| 7.2 | 2210 | 196.52 | 1.80 | S97 | |
| 7.8 | 2050 | 180.95 | 1.90 | SF97 | |
| 8.7 | 1840 | 161.74 | 2.10 | SA97 | |
| 9.7 | 1670 | 145.60 | 2.20 | SAF97 | |
| 11 | 1520 | 131.85 | 2.40 | | |
| 12 | 1360 | 116.92 | 2.60 | | |
| 13 | 1240 | 105.71 | 2.80 | | |
| 16 | 1060 | 89.60 | 3.10 | | |
| 5.5 | 2730 | 258.18 | 0.85 | | 4P |
| 6.3 | 2380 | 222.40 | 0.95 | | |
| 6.9 | 2190 | 202.96 | 1.05 | | |
| 7.8 | 1970 | 180.00 | 1.10 | | |
| 9.3 | 1680 | 151.30 | 1.30 | | |
| 10 | 1550 | 139.05 | 1.35 | S87 | |
| 11 | 1390 | 123.48 | 1.50 | SF87 | |
| 13 | 1250 | 110.40 | 1.60 | SA87 | |
| 14 | 1130 | 99.26 | 1.75 | SAF87 | |
| 16 | 990 | 86.15 | 1.90 | | |
| 17 | 1030 | 81.76 | 1.50 | | |
| 18 | 890 | 77.14 | 2.00 | | |
| 20 | 920 | 70.43 | 1.75 | | |
| 22 | 840 | 64.27 | 1.90 | | |
| 25 | 750 | 57.00 | 2.10 | | |
| 11 | 1390 | 130.00 | 0.85 | | 4P |
| 11 | 1320 | 123.20 | 0.90 | | |
| 13 | 1170 | 107.83 | 1.00 | | |
| 15 | 1060 | 97.14 | 1.10 | | |
| 17 | 940 | 85.22 | 1.15 | S77 | |
| 19 | 840 | 75.20 | 1.30 | SF77 | |
| 21 | 745 | 66.67 | 1.40 | SA77 | |
| 22 | 810 | 63.03 | 1.35 | SAF77 | |
| 25 | 645 | 56.92 | 1.55 | | |
| 26 | 695 | 53.87 | 1.60 | | |
| 29 | 635 | 49.38 | 1.75 | | |
| 33 | 560 | 43.33 | 1.95 | | |
| 34 | 535 | 41.07 | 2.10 | | |

# 斜齒蝸輪減速機 Helical Worm Gear Reducer

| 輸出轉速 Output speed (r/min) | 輸出轉矩 Output torque (N.M) | 傳動比 Ratio (i) | 使用係數 Service factor | 機型 Type | 馬達級數 Motor pole |
|---|---|---|---|---|---|
| 2.2 KW | | | | | |
| 39 | 470 | 35.94 | 2.3 | | |
| 44 | 425 | 32.38 | 2.6 | S77 | |
| 50 | 375 | 28.41 | 2.8 | SF77 | 4P |
| 56 | 330 | 25.07 | 3.1 | SA77 | |
| 62 | 310 | 22.89 | 2.3 | SAF77 | |
| 67 | 285 | 20.99 | 2.5 | | |
| 30 | 570 | 46.40 | 0.85 | | |
| 34 | 515 | 41.89 | 0.95 | | |
| 38 | 460 | 36.85 | 1.05 | | |
| 41 | 435 | 34.80 | 1.10 | | |
| 48 | 370 | 29.63 | 1.30 | | |
| 52 | 340 | 26.93 | 1.40 | S67 | |
| 60 | 295 | 23.33 | 1.60 | SF67 | 4P |
| 69 | 275 | 20.37 | 1.25 | SA67 | |
| 82 | 235 | 17.28 | 1.45 | SAF67 | |
| 90 | 210 | 15.60 | 1.60 | | |
| 103 | 186 | 13.73 | 1.85 | | |
| 109 | 176 | 12.96 | 1.95 | | |
| 128 | 151 | 11.03 | 2.30 | | |
| 141 | 137 | 10.03 | 2.50 | | |
| 162 | 119 | 8.69 | 2.80 | | |
| 99 | 190 | 14.24 | 0.90 | | |
| 117 | 162 | 12.10 | 1.05 | S57 | |
| 131 | 145 | 10.80 | 1.15 | SF57 | 4P |
| 153 | 124 | 9.23 | 1.35 | SA57 | |
| 163 | 117 | 8.64 | 1.40 | SAF57 | |
| 194 | 99 | 7.28 | 1.50 | | |
| 3.0 KW | | | | | |
| 4.9 | 4710 | 287 | 0.90 | S97 R57 | |
| 5.6 | 4140 | 252 | 1.00 | SF97 R57 | 4P |
| 6.4 | 3620 | 219 | 1.15 | SA97 R57 | |
| 6.8 | 3400 | 205 | 1.25 | SAF97 R57 | |
| 4.9 | 4290 | 286.40 | 0.95 | | |
| 5.3 | 3960 | 262.22 | 1.00 | | |
| 6.0 | 3530 | 231.67 | 1.15 | | |
| 7.1 | 3040 | 196.52 | 1.30 | | |
| 7.7 | 2810 | 180.95 | 1.40 | S97 | |
| 8.7 | 2530 | 161.74 | 1.50 | SF97 | 4P |
| 9.6 | 2300 | 145.60 | 1.65 | SA97 | |
| 11 | 2090 | 131.85 | 1.75 | SAF97 | |
| 12 | 1870 | 116.92 | 1.90 | | |
| 13 | 1700 | 105.71 | 2.00 | | |
| 16 | 1450 | 89.60 | 2.20 | | |
| 17 | 1470 | 80.85 | 2.20 | | |
| 7.8 | 2700 | 180.00 | 0.80 | | |
| 9.2 | 2300 | 151.30 | 0.95 | | |
| 10 | 2130 | 139.05 | 1.00 | | |
| 11 | 1900 | 123.48 | 1.10 | | |
| 13 | 1720 | 110.40 | 1.15 | | |
| 14 | 1550 | 99.26 | 1.25 | | |
| 16 | 1360 | 86.15 | 1.40 | S87 | |
| 17 | 1460 | 81.76 | 1.10 | SF87 | 4P |
| 18 | 1230 | 77.14 | 1.50 | SA87 | |
| 20 | 1260 | 70.43 | 1.25 | SAF87 | |
| 22 | 1160 | 64.27 | 1.40 | | |
| 25 | 1030 | 57.00 | 1.55 | | |
| 29 | 870 | 47.91 | 1.85 | | |
| 32 | 800 | 44.03 | 2.00 | | |
| 36 | 715 | 39.10 | 2.20 | | |
| 40 | 640 | 34.96 | 2.50 | | |

| 輸出轉速 Output speed (r/min) | 輸出轉矩 Output torque (N.M) | 傳動比 Ratio (i) | 使用係數 Service factor | 機型 Type | 馬達級數 Motor pole |
|---|---|---|---|---|---|
| 3.0 KW | | | | | |
| 16 | 1290 | 85.22 | 0.85 | | |
| 19 | 1150 | 75.20 | 0.95 | | |
| 21 | 1020 | 66.67 | 1.00 | | |
| 22 | 1110 | 63.03 | 1.00 | | |
| 25 | 880 | 56.92 | 1.10 | | |
| 26 | 950 | 53.87 | 1.15 | | |
| 28 | 880 | 49.39 | 1.25 | | |
| 32 | 770 | 43.33 | 1.40 | | |
| 34 | 735 | 41.07 | 1.50 | S77 | |
| 39 | 645 | 35.94 | 1.70 | SF77 | 4P |
| 43 | 585 | 32.38 | 1.85 | SA77 | |
| 49 | 515 | 28.41 | 2.00 | SAF77 | |
| 56 | 455 | 25.07 | 2.20 | | |
| 61 | 430 | 22.89 | 1.65 | | |
| 67 | 395 | 20.99 | 1.80 | | |
| 76 | 345 | 18.42 | 2.00 | | |
| 80 | 330 | 17.45 | 2.20 | | |
| 92 | 290 | 15.28 | 2.50 | | |
| 102 | 260 | 13.73 | 2.70 | | |
| 116 | 230 | 12.07 | 3.10 | | |
| 131 | 205 | 10.65 | 3.50 | | |
| 40 | 595 | 34.80 | 0.80 | | |
| 47 | 510 | 29.63 | 0.95 | | |
| 52 | 465 | 26.93 | 1.05 | | |
| 60 | 405 | 23.33 | 1.20 | | |
| 69 | 375 | 20.37 | 0.90 | | |
| 81 | 320 | 17.28 | 1.05 | S67 | |
| 90 | 290 | 15.60 | 1.15 | SF67 | 4P |
| 102 | 255 | 13.73 | 1.35 | SA67 | |
| 108 | 240 | 12.96 | 1.40 | SAF67 | |
| 127 | 205 | 11.03 | 1.65 | | |
| 140 | 188 | 10.03 | 1.80 | | |
| 161 | 164 | 8.69 | 2.00 | | |
| 185 | 143 | 7.56 | 2.10 | | |
| 130 | 199 | 10.80 | 0.85 | S57 | |
| 152 | 171 | 9.23 | 1.00 | SF57 | 4P |
| 162 | 160 | 8.64 | 1.05 | SA57 | |
| 192 | 136 | 7.28 | 1.10 | SAF57 | |
| 4.0 KW | | | | | |
| | | | | S97 R57 | |
| 6.5 | 4780 | 219 | 0.90 | SF97 R57 | 4P |
| 6.9 | 4490 | 205 | 0.95 | SA97 R57 | |
| | | | | SAF97 R57 | |
| 6.1 | 4650 | 231.67 | 0.85 | | |
| 7.2 | 3990 | 196.52 | 1.00 | | |
| 7.8 | 3700 | 180.95 | 1.05 | | |
| 8.8 | 3330 | 161.74 | 1.15 | | |
| 9.8 | 3020 | 145.60 | 1.25 | | |
| 11 | 2750 | 131.85 | 1.35 | S97 | |
| 12 | 2460 | 116.92 | 1.45 | SF97 | 4P |
| 13 | 2230 | 105.71 | 1.55 | SA97 | |
| 16 | 1910 | 89.60 | 1.70 | SAF97 | |
| 18 | 1940 | 80.85 | 1.65 | | |
| 20 | 1720 | 71.43 | 1.90 | | |
| 23 | 1470 | 60.59 | 2.20 | | |
| 25 | 1350 | 55.79 | 2.40 | | |
| 12 | 2510 | 123.48 | 0.80 | | |
| 13 | 2260 | 110.40 | 0.90 | | |
| 14 | 2040 | 99.26 | 0.95 | S87 | |
| 16 | 1790 | 86.15 | 1.05 | SF87 | 4P |
| 18 | 1610 | 77.14 | 1.15 | SA87 | |
| 20 | 1660 | 70.43 | 0.95 | SAF87 | |
| 22 | 1520 | 64.27 | 1.05 | | |
| 25 | 1350 | 57.00 | 1.20 | | |
| 30 | 1150 | 47.91 | 1.40 | | |

| 輸出轉速 Output speed (r/min) | 輸出轉矩 Output torque (N.M) | 傳動比 Ratio (i) | 使用係數 Service factor | 機型 Type | 馬達級數 Motor pole |
|---|---|---|---|---|---|
| 4.5 KW | | | | | |
| 32 | 1060 | 44.03 | 1.50 | | |
| 36 | 940 | 39.10 | 1.70 | S87 | |
| 41 | 840 | 34.96 | 1.90 | SF87 | 4P |
| 45 | 760 | 31.43 | 2.10 | SA87 | |
| 52 | 665 | 27.28 | 2.40 | SAF87 | |
| 56 | 635 | 25.50 | 1.95 | | |
| 25 | 1160 | 56.92 | 0.85 | | |
| 26 | 1250 | 53.87 | 0.90 | | |
| 29 | 1150 | 49.38 | 0.95 | | |
| 33 | 1020 | 43.33 | 1.10 | | |
| 35 | 960 | 41.07 | 1.15 | | |
| 40 | 850 | 35.94 | 1.30 | | |
| 44 | 765 | 32.38 | 1.40 | | |
| 50 | 675 | 28.41 | 1.55 | S77 | |
| 57 | 600 | 25.07 | 1.70 | SF77 | 4P |
| 62 | 565 | 22.89 | 1.25 | SA77 | |
| 68 | 520 | 20.99 | 1.35 | SAF77 | |
| 77 | 455 | 18.42 | 1.55 | | |
| 81 | 435 | 17.45 | 1.65 | | |
| 93 | 380 | 15.28 | 1.85 | | |
| 103 | 345 | 13.76 | 2.10 | | |
| 118 | 300 | 12.07 | 2.40 | | |
| 133 | 265 | 10.65 | 2.70 | | |
| 150 | 235 | 9.44 | 3.10 | | |
| 176 | 205 | 8.06 | 3.30 | | |
| 82 | 420 | 17.28 | 0.80 | | |
| 91 | 380 | 15.60 | 0.90 | | |
| 103 | 335 | 13.73 | 1.00 | S67 | |
| 110 | 320 | 12.96 | 1.05 | SF67 | 4P |
| 129 | 270 | 11.03 | 1.25 | SA67 | |
| 142 | 245 | 10.03 | 1.35 | SAF67 | |
| 163 | 215 | 8.69 | 1.55 | | |
| 188 | 188 | 7.56 | 1.55 | | |
| 5.5 KW | | | | | |
| 8.8 | 4550 | 161.74 | 0.85 | | |
| 9.8 | 4130 | 145.60 | 0.90 | | |
| 11 | 3760 | 131.85 | 0.95 | | |
| 12 | 3360 | 116.92 | 1.05 | | |
| 14 | 3050 | 105.71 | 1.15 | | |
| 16 | 2610 | 89.60 | 1.25 | S97 | |
| 18 | 2290 | 78.26 | 1.35 | SF97 | 4P |
| 20 | 2350 | 71.43 | 1.40 | SA97 | |
| 22 | 1930 | 65.45 | 1.50 | SAF97 | |
| 24 | 2000 | 60.59 | 1.65 | | |
| 26 | 1850 | 55.79 | 1.80 | | |
| 29 | 1660 | 49.87 | 2.00 | | |
| 32 | 1500 | 44.89 | 2.20 | | |
| 35 | 1360 | 40.65 | 2.40 | | |
| 19 | 2200 | 77.14 | 0.85 | | |
| 22 | 1850 | 64.00 | 0.90 | | |
| 25 | 1850 | 57.00 | 0.85 | | |
| 30 | 1560 | 47.91 | 1.00 | | |
| 32 | 1440 | 44.03 | 1.10 | | |
| 37 | 1280 | 39.10 | 1.25 | | |
| 41 | 1150 | 34.96 | 1.40 | S87 | |
| 45 | 1040 | 31.43 | 1.55 | SF87 | 4P |
| 52 | 910 | 27.28 | 1.75 | SA87 | |
| 56 | 870 | 25.50 | 1.45 | SAF87 | |
| 67 | 730 | 21.43 | 1.70 | | |
| 73 | 675 | 19.70 | 1.85 | | |
| 82 | 600 | 17.49 | 2.10 | | |
| 91 | 535 | 15.64 | 2.30 | | |
| 102 | 485 | 14.06 | 2.60 | | |
| 117 | 420 | 12.21 | 3.00 | | |
| 131 | 375 | 10.93 | 3.30 | | |

| 輸出轉速 Output speed (r/min) | 輸出轉矩 Output torque (N.M) | 傳動比 Ratio (i) | 使用係數 Service factor | 機型 Type | 馬達級數 Motor pole |
|---|---|---|---|---|---|
| 5.5 KW | | | | | |
| 35 | 1320 | 41.07 | 0.85 | | |
| 40 | 1160 | 35.94 | 0.95 | | |
| 44 | 1050 | 32.38 | 1.05 | | |
| 50 | 920 | 28.41 | 1.15 | | |
| 57 | 820 | 25.07 | 1.25 | | |
| 64 | 725 | 22.22 | 1.35 | S77 | |
| 78 | 625 | 18.41 | 1.15 | SF77 | 4P |
| 82 | 590 | 17.45 | 1.20 | SA77 | |
| 94 | 520 | 15.28 | 1.35 | SAF77 | |
| 104 | 470 | 13.76 | 1.50 | | |
| 118 | 410 | 12.07 | 1.75 | | |
| 134 | 365 | 10.65 | 2.00 | | |
| 151 | 325 | 9.44 | 2.20 | | |
| 177 | 275 | 8.06 | 2.50 | | |
| 130 | 370 | 11.03 | 0.90 | S67 | |
| 143 | 340 | 10.03 | 1.00 | SF67 | 4P |
| 165 | 295 | 8.69 | 1.15 | SA67 | |
| 189 | 255 | 7.56 | 1.15 | SAF67 | |
| 7.5 KW | | | | | |
| 14 | 4160 | 105.71 | 0.85 | | |
| 16 | 3560 | 89.60 | 0.90 | | |
| 18 | 3130 | 78.26 | 1.00 | | |
| 20 | 3200 | 71.43 | 1.05 | | |
| 22 | 2630 | 65.45 | 1.10 | | |
| 24 | 2730 | 60.59 | 1.20 | | |
| 26 | 2520 | 55.79 | 1.30 | S97 | |
| 29 | 2260 | 49.87 | 1.45 | SF97 | 4P |
| 32 | 2040 | 44.89 | 1.60 | SA97 | |
| 35 | 1850 | 40.65 | 1.80 | SAF97 | |
| 40 | 1650 | 36.05 | 2.00 | | |
| 44 | 1490 | 32.60 | 2.20 | | |
| 54 | 1240 | 26.39 | 2.10 | | |
| 61 | 1110 | 23.59 | 2.30 | | |
| 67 | 1000 | 21.23 | 2.60 | | |
| 74 | 910 | 19.23 | 2.90 | | |
| 32 | 1970 | 44.03 | 0.80 | | |
| 37 | 1750 | 39.10 | 0.90 | | |
| 41 | 1570 | 34.96 | 1.00 | | |
| 45 | 1420 | 31.43 | 1.15 | | |
| 52 | 1230 | 27.28 | 1.30 | | |
| 56 | 1180 | 25.50 | 1.05 | S87 | |
| 67 | 1000 | 21.43 | 1.25 | SF87 | 4P |
| 73 | 920 | 19.70 | 1.35 | SA87 | |
| 82 | 82 | 17.49 | 1.50 | SAF87 | |
| 91 | 730 | 15.64 | 1.70 | | |
| 102 | 660 | 14.06 | 1.90 | | |
| 117 | 676 | 12.21 | 2.20 | | |
| 131 | 616 | 10.93 | 2.40 | | |
| 158 | 430 | 9.07 | 2.70 | | |
| 181 | 375 | 7.88 | 2.70 | | |
| 50 | 1260 | 28.41 | 0.85 | | |
| 57 | 1110 | 25.07 | 0.90 | | |
| 64 | 990 | 22.22 | 1.00 | | |
| 78 | 850 | 18.42 | 0.85 | S77 | |
| 82 | 810 | 17.45 | 0.90 | SF77 | 4P |
| 94 | 705 | 15.28 | 1.00 | SA77 | |
| 104 | 640 | 13.76 | 1.10 | SAF77 | |
| 118 | 650 | 12.07 | 1.30 | | |
| 134 | 495 | 10.65 | 1.45 | | |
| 151 | 440 | 9.44 | 1.65 | | |
| 177 | 380 | 8.06 | 1.80 | | |

# 斜齒蝸輪減速機 Helical Worm Gear Reducer

| 輸出轉速 Output speed (r/min) | 輸出轉矩 Output torque (N.M) | 傳動比 Ratio (i) | 使用係數 Service factor | 機型 Type | 馬達級數 Motor pole |
|---|---|---|---|---|---|
| 11.0 KW | | | | | |
| 26 | 3670 | 55.79 | 0.90 | | |
| 29 | 3290 | 49.87 | 1.00 | | |
| 32 | 2970 | 44.89 | 1.10 | | |
| 35 | 2700 | 40.65 | 1.20 | | |
| 40 | 2400 | 36.05 | 1.40 | | |
| 44 | 2170 | 32.60 | 1.45 | S97 | |
| 55 | 1810 | 26.39 | 1.45 | SF97 | 4P |
| 61 | 1620 | 23.59 | 1.60 | SA97 | |
| 68 | 1460 | 21.23 | 1.80 | SAF97 | |
| 75 | 1320 | 19.23 | 1.95 | | |
| 84 | 1180 | 17.05 | 2.20 | | |
| 93 | 1070 | 15.42 | 2.30 | | |
| 110 | 900 | 13.07 | 2.60 | | |
| 126 | 790 | 11.41 | 2.80 | | |
| 53 | 1800 | 27.28 | 0.90 | | |
| 59 | 1610 | 24.43 | 1.00 | | |
| 71 | 1340 | 20.27 | 1.20 | | |
| 73 | 1340 | 19.70 | 0.95 | | |
| 82 | 1190 | 17.49 | 1.05 | S87 | |
| 92 | 1070 | 15.64 | 1.15 | SF87 | 4P |
| 102 | 960 | 14.06 | 1.30 | SA87 | |
| 118 | 840 | 12.21 | 1.50 | SAF87 | |
| 132 | 750 | 10.93 | 1.65 | | |
| 159 | 625 | 9.07 | 1.85 | | |
| 183 | 545 | 7.88 | 1.85 | | |
| 15.0 KW | | | | | |
| 33 | 4000 | 44.89 | 0.85 | | |
| 36 | 3630 | 40.65 | 0.90 | | |
| 41 | 3230 | 36.05 | 1.00 | | |
| 45 | 2920 | 32.60 | 1.10 | | |
| 55 | 2430 | 26.39 | 1.05 | | |
| 62 | 2180 | 23.59 | 1.20 | S97 | |
| 59 | 1970 | 21.23 | 1.30 | SF97 | 4P |
| 76 | 1780 | 19.23 | 1.45 | SA97 | |
| 86 | 1580 | 17.05 | 1.60 | SAF97 | |
| 95 | 1430 | 15.42 | 1.70 | | |
| 112 | 1220 | 13.07 | 1.90 | | |
| 128 | 1060 | 11.41 | 2.10 | | |
| 153 | 890 | 9.55 | 2.30 | | |
| 177 | 775 | 8.26 | 2.30 | | |
| 93 | 1430 | 15.64 | 0.85 | | |
| 104 | 1290 | 14.06 | 0.95 | S87 | |
| 120 | 1120 | 12.21 | 1.10 | SF87 | 4P |
| 134 | 1010 | 10.93 | 1.25 | SA87 | |
| 161 | 840 | 9.07 | 1.35 | SAF87 | |
| 185 | 730 | 7.88 | 1.40 | | |
| 18.5 KW | | | | | |
| 41 | 3970 | 36.05 | 0.85 | | |
| 45 | 3590 | 32.60 | 0.90 | | |
| 53 | 3060 | 27.63 | 1.00 | | |
| 61 | 2680 | 24.13 | 1.05 | | |
| 69 | 2420 | 21.23 | 1.10 | S97 | |
| 76 | 2190 | 19.23 | 1.20 | SF97 | 4P |
| 86 | 1950 | 17.05 | 1.30 | SA97 | |
| 95 | 1760 | 15.42 | 1.40 | SAF97 | |
| 112 | 1500 | 13.07 | 1.55 | | |
| 128 | 1310 | 11.41 | 1.70 | | |
| 153 | 1100 | 9.55 | 1.85 | | |
| 177 | 950 | 8.26 | 1.85 | | |

| 輸出轉速 Output speed (r/min) | 輸出轉矩 Output torque (N.M) | 傳動比 Ratio (i) | 使用係數 Service factor | 機型 Type | 馬達級數 Motor pole |
|---|---|---|---|---|---|
| 22 KW | | | | | |
| 53 | 3630 | 27.63 | 0.85 | | |
| 61 | 3180 | 24.13 | 0.90 | | |
| 69 | 2870 | 21.23 | 0.90 | | |
| 76 | 2600 | 19.23 | 1.00 | S97 | |
| 86 | 2310 | 17.05 | 1.10 | SF97 | 4P |
| 95 | 2090 | 15.42 | 1.20 | SA97 | |
| 112 | 1780 | 13.07 | 1.30 | SAF97 | |
| 128 | 1560 | 11.41 | 1.40 | | |
| 153 | 1300 | 9.55 | 1.55 | | |
| 177 | 1130 | 8.26 | 1.55 | | |

| 1400RPM | S37 | | | | | 92Nm |
|---|---|---|---|---|---|---|
| 減速比<br>i | 0.25kw-1/4HP | | 0.37Kw-1/2HP | | 0.75Kw-1HP | |
| | 輸出<br>轉矩<br>(N.m) | 使用<br>係數<br>(f.s) | 輸出<br>轉矩<br>(N.m) | 使用<br>係數<br>(f.s) | 輸出<br>轉矩<br>(N.m) | 使用<br>係數<br>(f.s) |
| 157.43 | | | | | | |
| 144.4 | | | | | | |
| 122.94 | | | | | | |
| 106 | | | | | | |
| 98.90 | 165 | 0.56 | | | | |
| 86.36 | 144 | 0.64 | | | | |
| 80.96 | 135 | 0.68 | | | | |
| 71.44 | 119 | 0.77 | | | | |
| 63.33 | 106 | 0.87 | | | | |
| 55.93 | 93 | 0.99 | 138 | 0.67 | | |
| 51.30 | 86 | 1.07 | 127 | 0.72 | | |
| 43.68 | 73 | 1.26 | 108 | 0.85 | | |
| 37.66 | 63 | 1.46 | 93 | 0.99 | | |
| 35.1 | 59 | 1.56 | 87 | 1.06 | | |
| 30.68 | 51 | 1.8 | 76 | 1.21 | | |
| 28.76 | 48 | 1.92 | 71 | 1.3 | | |
| 25.38 | 42 | 2.19 | 63 | 1.46 | | |
| 22.50 | 38 | 2.42 | 56 | 1.64 | | |
| 19.89 | 33 | 2.79 | 49 | 1.88 | | |
| 18.24 | 30 | 3.07 | 45 | 2.04 | | |
| 15.53 | 26 | 3.54 | 38 | 2.42 | | |
| 13.39 | 22 | 4.18 | 33 | 2.79 | 67 | 1.37 |
| 12.48 | 21 | 4.38 | 31 | 2.97 | 63 | 1.46 |
| 10.91 | 18 | 5.11 | 27 | 3.41 | 55 | 1.67 |
| 10.23 | 17 | 5.41 | 25 | 3.68 | 51 | 1.8 |
| 9.02 | 15 | 6.13 | 22 | 4.18 | 45 | 2.04 |
| 8 | 13 | 7.08 | 20 | 4.6 | 40 | 2.3 |
| 6.8 | 11 | 8.36 | 17 | 5.41 | 34 | 2.71 |

| 1400RPM | S47 | | | | | | | 170Nm |
|---|---|---|---|---|---|---|---|---|
| 減速比 i | 0.25Kw-1/4HP | | 0.37Kw-1/2HP | | 0.75Kw-1HP | | 1.5Kw-2HP | |
| | 輸出轉矩 (N.m) | 使用係數 (f.s) | 輸出轉矩 (N.m) | 使用係數 (f.s) | 輸出轉矩 (N.m) | 使用係數 (f.s) | 輸出轉矩 (N.m) | 使用係數 (f.s) |
| 201.00 | 336 | 0.51 | | | | | | |
| 184.80 | 309 | 0.55 | | | | | | |
| 158.12 | 264 | 0.64 | | | | | | |
| 137.05 | 229 | 0.74 | 339 | 0.5 | | | | |
| 128.10 | 214 | 0.79 | 317 | 0.54 | | | | |
| 110.73 | 185 | 0.92 | 274 | 0.62 | | | | |
| 94.08 | 157 | 1.08 | 233 | 0.73 | | | | |
| 84.00 | 140 | 1.21 | 208 | 0.82 | | | | |
| 71.75 | 120 | 1.42 | 177 | 0.96 | | | | |
| 69.39 | 116 | 1.47 | 172 | 0.99 | | | | |
| 67.20 | 112 | 1.52 | 166 | 1.02 | | | | |
| 63.80 | 107 | 1.59 | 158 | 1.08 | | | | |
| 56.61 | | | | | | | | |
| 54.59 | 91 | 1.87 | 135 | 1.26 | | | | |
| 47.32 | 79 | 2.15 | 117 | 1.45 | 237 | 0.72 | | |
| 44.22 | | | 109 | 1.56 | 222 | 0.77 | | |
| 38.23 | | | 95 | 1.79 | 192 | 0.89 | | |
| 32.48 | | | 80 | 2.13 | 163 | 1.04 | | |
| 29.00 | | | 72 | 2.36 | 145 | 1.17 | | |
| 24.77 | | | 61 | 2.79 | 124 | 1.37 | | |
| 23.20 | | | 57 | 2.98 | 116 | 1.47 | | |
| 20.33 | | | 50 | 3.4 | 102 | 1.67 | | |
| 17.62 | | | 44 | 3.86 | 88 | 1.93 | | |
| 16.47 | | | 41 | 4.15 | 83 | 2.05 | | |
| 14.24 | | | | | 71 | 2.39 | 143 | 1.19 |
| 12.10 | | | | | 61 | 2.79 | 121 | 1.4 |
| 10.80 | | | | | 54 | 3.15 | 108 | 1.57 |
| 9.23 | | | | | 46 | 3.7 | 93 | 1.83 |
| 8.64 | | | | | 43 | 3.95 | 87 | 1.95 |
| 7.28 | | | | | 37 | 4.59 | 73 | 2.33 |

| 1400RPM | S57 | | | | | | | | | | | 295Nm |
|---|---|---|---|---|---|---|---|---|---|---|---|---|
| 減速比 i | 0.25Kw-1/4HP | | 0.37Kw-1/2HP | | 0.75Kw-1HP | | 1.5Kw-2HP | | 2.2Kw-3HP | | 3.0Kw-4HP | |
| | 輸出轉矩 (N.m) | 使用係數 (f.s) | 輸出轉矩 (N.m) | 使用係數 (f.s) | 輸出轉矩 (N.m) | 使用係數 (f.s) | 輸出轉矩 (N.m) | 使用係數 (f.s) | 輸出轉矩 (N.m) | 使用係數 (f.s) | 輸出轉矩 (N.m) | 使用係數 (f.s) |
| 201.00 | 336 | 0.88 | 497 | 0.59 | | | | | | | | |
| 184.80 | 309 | 0.95 | 457 | 0.65 | | | | | | | | |
| 158.12 | 264 | 1.12 | 391 | 0.75 | | | | | | | | |
| 137.05 | 229 | 1.29 | 339 | 0.87 | | | | | | | | |
| 128.10 | 214 | 1.38 | 317 | 0.93 | | | | | | | | |
| 110.73 | 185 | 1.59 | 274 | 1.08 | 555 | 0.53 | | | | | | |
| 94.08 | 157 | 1.88 | 233 | 1.27 | 472 | 0.63 | | | | | | |
| 84.00 | 140 | 2.11 | 208 | 1.42 | 421 | 0.7 | | | | | | |
| 71.75 | | | 177 | 1.67 | 360 | 0.82 | | | | | | |
| 69.39 | | | 172 | 1.72 | | | | | | | | |
| 67.20 | | | 166 | 1.78 | 337 | 0.88 | | | | | | |
| 63.80 | | | 158 | 1.87 | | | | | | | | |
| 56.61 | | | | | | | | | | | | |
| 54.59 | | | | | 274 | 1.08 | | | | | | |
| 47.32 | | | | | 237 | 1.24 | | | | | | |
| 44.22 | | | | | 222 | 1.33 | | | | | | |
| 38.23 | | | | | 192 | 1.54 | | | | | | |
| 32.48 | | | | | 163 | 1.81 | 326 | 0.9 | | | | |
| 29.00 | | | | | 145 | 2.03 | 291 | 1.01 | | | | |
| 24.77 | | | | | 124 | 2.38 | 248 | 1.19 | | | | |
| 23.20 | | | | | 116 | 2.54 | 233 | 1.27 | | | | |
| 20.33 | | | | | 102 | 2.89 | 204 | 1.45 | | | | |
| 17.62 | | | | | 88 | 3.35 | 177 | 1.67 | | | | |
| 16.47 | | | | | 83 | 3.55 | 165 | 1.79 | | | | |
| 14.24 | | | | | 71 | 4.15 | 143 | 2.06 | 209 | 1.41 | | |
| 12.10 | | | | | | | 121 | 2.44 | 178 | 1.66 | | |
| 10.80 | | | | | | | 108 | 2.73 | 159 | 1.86 | 217 | 1.36 |
| 9.23 | | | | | | | 93 | 3.17 | 136 | 2.17 | 185 | 1.59 |
| 8.64 | | | | | | | | | 127 | 2.32 | 173 | 1.71 |
| 7.28 | | | | | | | | | 107 | 2.76 | 146 | 2.02 |

# 斜齒蝸輪減速機 Helical Worm Gear Reducer

| 1400RPM | S67 | | | | | | | | | | | | | 520Nm |
|---|---|---|---|---|---|---|---|---|---|---|---|---|---|---|
| 減速比 i | 0.25Kw-1/4HP | | 0.37Kw-1/2HP | | 0.75Kw-1HP | | 1.5Kw-2HP | | 2.2Kw-3HP | | 3.0Kw-4HP | | 4.0Kw-5HP | |
| | 輸出轉矩 (N.m) | 使用係數 (f.s) | 輸出轉矩 (N.m) | 使用係數 (f.s) | 輸出轉矩 (N.m) | 使用係數 (f.s) | 輸出轉矩 (N.m) | 使用係數 (f.s) | 輸出轉矩 (N.m) | 使用係數 (f.s) | 輸出轉矩 (N.m) | 使用係數 (f.s) | 輸出轉矩 (N.m) | 使用係數 (f.s) |
| 217.41 | 363 | 1.43 | 538 | 0.97 | | | | | | | | | | |
| 190.11 | 318 | 1.64 | 470 | 1.11 | 953 | 0.55 | | | | | | | | |
| 180.60 | 302 | 1.72 | 447 | 1.16 | 905 | 0.57 | | | | | | | | |
| 158.45 | 265 | 1.96 | 392 | 1.33 | 794 | 0.65 | | | | | | | | |
| 134.40 | 225 | 2.31 | 332 | 1.57 | 674 | 0.77 | | | | | | | | |
| 121.33 | 203 | 2.56 | 300 | 1.73 | 608 | 0.86 | | | | | | | | |
| 106.75 | 178 | 2.92 | | | 535 | 0.97 | | | | | | | | |
| 100.80 | | | | | 505 | 1.03 | | | | | | | | |
| 85.83 | | | | | 430 | 1.21 | 861 | 0.6 | | | | | | |
| 78.00 | | | | | 391 | 1.33 | 782 | 0.66 | | | | | | |
| 75.06 | | | | | 376 | 1.38 | | | | | | | | |
| 67.57 | | | | | 339 | 1.53 | | | | | | | | |
| 65.63 | | | | | 329 | 1.58 | 658 | 0.79 | | | | | | |
| 62.35 | | | | | 313 | 1.66 | 625 | 0.83 | | | | | | |
| 58.80 | | | | | | | | | | | | | | |
| 54.70 | | | | | | | 549 | 0.95 | | | | | | |
| 46.40 | | | | | | | 465 | 1.12 | 682 | 0.76 | | | | |
| 41.89 | | | | | | | 420 | 1.24 | 616 | 0.84 | | | | |
| 36.85 | | | | | | | 370 | 1.41 | 542 | 0.96 | | | | |
| 34.80 | | | | | | | 349 | 1.49 | 512 | 1.02 | 698 | 0.74 | | |
| 29.63 | | | | | | | 297 | 1.75 | 436 | 1.19 | 594 | 0.88 | | |
| 26.93 | | | | | | | 270 | 1.93 | 396 | 1.31 | 540 | 0.96 | | |
| 24.44 | | | | | | | 245 | 2.12 | | | | | | |
| 23.33 | | | | | | | | | 343 | 1.52 | 468 | 1.11 | | |
| 23.22 | | | | | | | 233 | 2.23 | | | | | | |
| 20.37 | | | | | | | 204 | 2.55 | 300 | 1.73 | 409 | 1.27 | | |
| 20.30 | | | | | | | | | | | | | | |
| 17.28 | | | | | | | 173 | 3.01 | 254 | 2.05 | 347 | 1.5 | 462 | 1.13 |
| 15.60 | | | | | | | 156 | 3.33 | 229 | 2.27 | 313 | 1.66 | 417 | 1.25 |
| 13.73 | | | | | | | 138 | 3.77 | 202 | 2.57 | 275 | 1.89 | 367 | 1.42 |
| 12.96 | | | | | | | | | 191 | 2.72 | 260 | 2 | 347 | 1.5 |
| 11.03 | | | | | | | | | 162 | 3.21 | 221 | 2.35 | 295 | 1.76 |
| 10.06 | | | | | | | | | 148 | 3.51 | 202 | 2.57 | 269 | 1.93 |
| 8.69 | | | | | | | | | 128 | 4.06 | 174 | 2.99 | 232 | 2.24 |
| 7.56 | | | | | | | | | | | 152 | 3.42 | 202 | 2.57 |

| 1400RPM | S77 | | | | | | | | | | | | | 1270Nm |
|---|---|---|---|---|---|---|---|---|---|---|---|---|---|---|
| 減速比 i | 0.75Kw-1HP | | 1.5Kw-2HP | | 2.2Kw-3HP | | 3.0Kw-4HP | | 4.0Kw-5HP | | 5.5Kw-7.5HP | | 7.5Kw-10HP | |
| | 輸出轉矩 (N.m) | 使用係數 (f.s) | 輸出轉矩 (N.m) | 使用係數 (f.s) | 輸出轉矩 (N.m) | 使用係數 (f.s) | 輸出轉矩 (N.m) | 使用係數 (f.s) | 輸出轉矩 (N.m) | 使用係數 (f.s) | 輸出轉矩 (N.m) | 使用係數 (f.s) | 輸出轉矩 (N.m) | 使用係數 (f.s) |
| 256.47 | 1286 | 0.99 | | | | | | | | | | | | |
| 225.26 | 1129 | 1.12 | | | | | | | | | | | | |
| 214.00 | 1073 | 1.18 | | | | | | | | | | | | |
| 189.09 | 948 | 1.34 | 1896 | 0.67 | | | | | | | | | | |
| 161.60 | 810 | 1.57 | 1620 | 0.78 | | | | | | | | | | |
| 148.15 | 743 | 1.71 | 1486 | 0.85 | | | | | | | | | | |
| 130.00 | 652 | 1.95 | 1304 | 0.97 | 1912 | 0.66 | | | | | | | | |
| 123.20 | 618 | 2.06 | 1235 | 1.03 | 1812 | 0.7 | | | | | | | | |
| 107.83 | 541 | 2.35 | 1081 | 1.17 | 1586 | 0.8 | | | | | | | | |
| 97.14 | | | 974 | 1.3 | 1429 | 0.89 | | | | | | | | |
| 85.22 | | | 855 | 1.49 | 1253 | 1.01 | 1709 | 0.74 | | | | | | |
| 75.20 | | | | | 1106 | 1.15 | 1508 | 0.84 | | | | | | |
| 75.09 | | | 753 | 1.69 | | | | | | | | | | |
| 71.33 | | | 715 | 1.78 | | | | | | | | | | |
| 66.67 | | | 669 | 1.9 | 981 | 1.29 | 1337 | 0.95 | | | | | | |
| 63.03 | | | 632 | 2.01 | 927 | 1.37 | 1264 | 1 | | | | | | |
| 56.92 | | | 571 | 2.22 | 837 | 1.52 | 1142 | 1.11 | 1522 | 0.83 | | | | |
| 53.87 | | | 540 | 2.35 | 792 | 1.6 | 1080 | 1.18 | 1440 | 0.88 | | | | |
| 49.38 | | | 495 | 2.57 | 726 | 1.75 | 990 | 1.28 | 1320 | 0.96 | | | | |
| 43.33 | | | 434 | 2.93 | 637 | 1.99 | 869 | 1.46 | 1159 | 1.1 | | | | |
| 41.07 | | | | | 604 | 2.1 | 824 | 1.54 | 1098 | 1.16 | 1510 | 0.84 | | |
| 35.94 | | | | | 529 | 2.4 | 721 | 1.76 | 961 | 1.32 | 1321 | 0.96 | | |
| 32.38 | | | | | 476 | 2.67 | 649 | 1.96 | 866 | 1.47 | 1191 | 1.07 | | |
| 28.41 | | | | | 418 | 3.04 | 570 | 2.23 | 760 | 1.67 | 1045 | 1.22 | 1424 | 0.89 |
| 25.07 | | | | | 369 | 3.44 | 503 | 2.52 | 670 | 1.9 | 922 | 1.38 | 1257 | 1.01 |
| 22.89 | | | | | 337 | 3.77 | 459 | 2.77 | 612 | 2.08 | | | | |
| 22.22 | | | | | 327 | 3.88 | | | | | 817 | 1.55 | 1114 | 1.14 |
| 20.99 | | | | | | | 421 | 3.02 | 561 | 2.26 | | | | |
| 18.97 | | | | | | | | | | | | | | |
| 18.42 | | | | | | | 369 | 3.44 | 493 | 2.58 | 677 | 1.88 | 924 | 1.37 |
| 17.45 | | | | | | | 350 | 3.63 | 467 | 2.72 | 642 | 1.98 | 875 | 1.45 |
| 15.28 | | | | | | | 306 | 4.15 | 409 | 3.11 | 562 | 2.26 | 766 | 1.66 |
| 13.76 | | | | | | | 276 | 4.6 | 368 | 3.45 | 506 | 2.51 | 690 | 1.84 |
| 12.07 | | | | | | | 242 | 5.25 | 323 | 3.93 | 444 | 2.86 | 605 | 2.1 |
| 10.65 | | | | | | | 214 | 5.93 | 285 | 4.46 | 392 | 3.24 | 534 | 2.38 |
| 9.44 | | | | | | | | | 252 | 5.04 | 347 | 3.66 | 473 | 2.68 |
| 8.06 | | | | | | | | | 216 | 5.88 | 296 | 4.29 | 404 | 3.14 |

| 1400RPM | S87 | | | | | | | 2280Nm |
|---|---|---|---|---|---|---|---|---|
| 減速比 i | 0.75Kw-1HP | | 1.5Kw-2HP | | 2.2Kw-3HP | | 3.0Kw-4HP | |
| | 輸出轉矩 (N.m) | 使用係數 (f.s) | 輸出轉矩 (N.m) | 使用係數 (f.s) | 輸出轉矩 (N.m) | 使用係數 (f.s) | 輸出轉矩 (N.m) | 使用係數 (f.s) |
| 288.00 | 1444 | 1.58 | 2888 | 0.79 | | | | |
| 258.18 | 1294 | 1.76 | 2589 | 0.88 | 3797 | 0.6 | | |
| 222.40 | 1115 | 2.04 | 2230 | 1.02 | 3271 | 0.7 | | |
| 202.96 | 1018 | 2.24 | 2035 | 1.12 | 2985 | 0.76 | | |
| 180.00 | | | 1805 | 1.26 | 2647 | 0.86 | 3610 | 0.63 |
| 151.30 | | | 1517 | 1.5 | 2225 | 1.02 | 3034 | 0.75 |
| 139.05 | | | 1394 | 1.64 | 2045 | 1.11 | 2789 | 0.82 |
| 123.48 | | | 1238 | 1.84 | 1816 | 1.26 | 2476 | 0.92 |
| 110.40 | | | 1107 | 2.06 | 1624 | 1.4 | 2214 | 1.03 |
| 99.26 | | | 995 | 2.29 | 1460 | 1.56 | 1991 | 1.15 |
| 91.20 | | | | | | | | |
| 86.15 | | | | | 1267 | 1.8 | 1728 | 1.32 |
| 81.76 | | | | | 1202 | 1.9 | 1640 | 1.39 |
| 77.14 | | | | | 1134 | 2.01 | 1547 | 1.47 |
| 70.43 | | | | | 1036 | 2.2 | 1412 | 1.61 |
| 64.00 | | | | | 941 | 2.42 | 1284 | 1.78 |
| 64.00 | | | | | | | | |
| 57.00 | | | | | 838 | 2.72 | 1143 | 1.99 |
| 47.91 | | | | | | | 961 | 2.37 |
| 44.03 | | | | | | | 883 | 2.58 |
| 39.10 | | | | | | | 784 | 2.91 |
| 34.96 | | | | | | | 701 | 3.25 |
| 31.43 | | | | | | | | |
| 27.28 | | | | | | | | |
| 25.50 | | | | | | | | |
| 24.43 | | | | | | | | |
| 21.43 | | | | | | | | |
| 20.27 | | | | | | | | |
| 19.70 | | | | | | | | |
| 17.49 | | | | | | | | |
| 15.64 | | | | | | | | |
| 14.06 | | | | | | | | |
| 12.21 | | | | | | | | |
| 10.93 | | | | | | | | |
| 9.07 | | | | | | | | |
| 7.88 | | | | | | | | |

| 1400RPM | S87 | | | | | | | | | 2280Nm |
|---|---|---|---|---|---|---|---|---|---|---|
| 減速比 i | 4.0Kw-5HP | | 5.5Kw-7.5HP | | 7.5Kw-10HP | | 11Kw-15HP | | 15Kw-20HP | |
| | 輸出轉矩 (N.m) | 使用係數 (f.s) | 輸出轉矩 (N.m) | 使用係數 (f.s) | 輸出轉矩 (N.m) | 使用係數 (f.s) | 輸出轉矩 (N.m) | 使用係數 (f.s) | 輸出轉矩 (N.m) | 使用係數 (f.s) |
| 288.00 | | | | | | | | | | |
| 258.18 | | | | | | | | | | |
| 222.40 | | | | | | | | | | |
| 202.96 | | | | | | | | | | |
| 180.00 | | | | | | | | | | |
| 151.30 | | | | | | | | | | |
| 139.05 | | | | | | | | | | |
| 123.48 | 3302 | 0.69 | | | | | | | | |
| 110.40 | 2952 | 0.77 | | | | | | | | |
| 99.26 | 2654 | 0.86 | | | | | | | | |
| 91.20 | | | | | | | | | | |
| 86.15 | 2304 | 0.99 | | | | | | | | |
| 81.76 | | | | | | | | | | |
| 77.14 | 2063 | 1.11 | 2836 | 0.8 | | | | | | |
| 70.43 | 1883 | 1.21 | | | | | | | | |
| 64.00 | 1711 | 1.33 | 2353 | 0.97 | | | | | | |
| 64.00 | | | | | | | | | | |
| 57.00 | 1524 | 1.5 | 2096 | 1.09 | | | | | | |
| 47.91 | 1281 | 1.78 | 1762 | 1.29 | | | | | | |
| 44.03 | 1177 | 1.94 | 1619 | 1.41 | 2208 | 1.03 | | | | |
| 39.10 | 1046 | 2.18 | 1438 | 1.59 | 1960 | 1.16 | | | | |
| 34.96 | 935 | 2.44 | 1285 | 1.77 | 1753 | 1.3 | | | | |
| 31.43 | 840 | 2.71 | 1156 | 1.97 | 1576 | 1.45 | | | | |
| 27.28 | 729 | 3.13 | 1003 | 2.27 | 1368 | 1.67 | 2006 | 1.14 | | |
| 25.50 | 682 | 3.34 | 938 | 2.43 | 1279 | 1.78 | | | | |
| 24.43 | | | | | | | 1796 | 1.27 | | |
| 21.43 | | | 788 | 2.89 | 1074 | 2.12 | | | | |
| 20.27 | | | | | | | 1491 | 1.53 | | |
| 19.70 | | | 724 | 3.15 | 988 | 2.31 | 1449 | 1.57 | | |
| 17.49 | | | 643 | 3.55 | 877 | 2.6 | 1286 | 1.77 | | |
| 15.64 | | | 575 | 3.97 | 784 | 2.91 | 1150 | 1.98 | 1568 | 1.45 |
| 14.06 | | | 517 | 4.41 | 705 | 3.23 | 1034 | 2.21 | 1410 | 1.62 |
| 12.21 | | | 449 | 5.08 | 612 | 3.73 | 898 | 2.54 | 1224 | 1.86 |
| 10.93 | | | 402 | 5.67 | 548 | 4.16 | 804 | 2.84 | 1096 | 2.08 |
| 9.07 | | | | | 455 | 5.01 | 667 | 3.42 | 909 | 2.51 |
| 7.88 | | | | | 395 | 5.77 | 579 | 3.94 | 790 | 2.89 |

| 1400RPM | S97 | | | | | | | | | 4000Nm |
|---|---|---|---|---|---|---|---|---|---|---|
| 減速比 i | 1.5Kw-2HP | | 2.2Kw-3HP | | 3.0Kw-5HP | | 4.0Kw-5HP | | 5.5Kw-7.5HP | |
| | 輸出轉矩 (N.m) | 使用係數 (f.s) | 輸出轉矩 (N.m) | 使用係數 (f.s) | 輸出轉矩 (N.m) | 使用係數 (f.s) | 輸出轉矩 (N.m) | 使用係數 (f.s) | 輸出轉矩 (N.m) | 使用係數 (f.s) |
| 286.40 | 2872 | 1.39 | 4212 | 0.95 | 5744 | 0.7 | | | | |
| 262.22 | 2629 | 1.52 | 3856 | 1.04 | 5259 | 0.76 | | | | |
| 231.67 | 2323 | 1.72 | 3407 | 1.17 | 4646 | 0.86 | 6195 | 0.65 | | |
| 196.52 | 1971 | 2.03 | 2890 | 1.38 | 3941 | 1.01 | 5255 | 0.76 | | |
| 180.95 | | | 2661 | 1.5 | 3629 | 1.1 | 4839 | 0.83 | | |
| 161.74 | | | 2379 | 1.68 | 3244 | 1.23 | 4325 | 0.92 | 5947 | 0.67 |
| 145.60 | | | 2141 | 1.87 | 2920 | 1.37 | 3893 | 1.03 | 5353 | 0.75 |
| 131.85 | | | 1939 | 2.06 | 2644 | 1.51 | 3526 | 1.13 | 4848 | 0.83 |
| 116.92 | | | 1720 | 2.33 | 2345 | 1.71 | 3126 | 1.28 | 4299 | 0.93 |
| 105.71 | | | 1555 | 2.57 | 2120 | 1.89 | 2827 | 1.41 | 3887 | 1.03 |
| 89.60 | | | 1318 | 3.03 | 1797 | 2.23 | 2396 | 1.67 | 3294 | 1.21 |
| 80.85 | | | | | 1621 | 2.47 | 2162 | 1.85 | | |
| 78.26 | | | | | | | | | 2877 | 1.39 |
| 71.43 | | | | | | | 1910 | 2.09 | 2626 | 1.52 |
| 65.45 | | | | | | | | | 2406 | 1.66 |
| 60.59 | | | | | | | 1620 | 2.47 | 2228 | 1.8 |
| 55.79 | | | | | | | 1492 | 2.68 | 2051 | 1.95 |
| 49.87 | | | | | | | | | 1834 | 2.18 |
| 44.89 | | | | | | | | | 1650 | 2.42 |
| 40.65 | | | | | | | | | 1495 | 2.68 |
| 36.05 | | | | | | | | | | |
| 32.60 | | | | | | | | | | |
| 27.63 | | | | | | | | | | |
| 26.39 | | | | | | | | | | |
| 24.13 | | | | | | | | | | |
| 23.59 | | | | | | | | | | |
| 21.23 | | | | | | | | | | |
| 19.23 | | | | | | | | | | |
| 17.05 | | | | | | | | | | |
| 15.42 | | | | | | | | | | |
| 13.07 | | | | | | | | | | |
| 11.41 | | | | | | | | | | |
| 9.55 | | | | | | | | | | |
| 8.26 | | | | | | | | | | |

| 1400RPM | S97 | | | | | | | | | 4000Nm |
|---|---|---|---|---|---|---|---|---|---|---|
| 減速比 i | 7.5Kw-10HP | | 11Kw-15HP | | 15Kw-20HP | | 18.5Kw-25HP | | 22Kw-30HP | |
| | 輸出轉矩 (N.m) | 使用係數 (f.s) | 輸出轉矩 (N.m) | 使用係數 (f.s) | 輸出轉矩 (N.m) | 使用係數 (f.s) | 輸出轉矩 (N.m) | 使用係數 (f.s) | 輸出轉矩 (N.m) | 使用係數 (f.s) |
| 286.40 | | | | | | | | | | |
| 262.22 | | | | | | | | | | |
| 231.67 | | | | | | | | | | |
| 196.52 | | | | | | | | | | |
| 180.95 | | | | | | | | | | |
| 161.74 | | | | | | | | | | |
| 145.60 | | | | | | | | | | |
| 131.85 | | | | | | | | | | |
| 116.92 | | | | | | | | | | |
| 105.71 | 5300 | 0.75 | | | | | | | | |
| 89.60 | 4492 | 0.89 | | | | | | | | |
| 80.85 | | | | | | | | | | |
| 78.26 | 3924 | 1.02 | | | | | | | | |
| 71.43 | 3581 | 1.12 | | | | | | | | |
| 65.45 | 3281 | 1.22 | | | | | | | | |
| 60.59 | 3038 | 1.32 | | | | | | | | |
| 55.79 | 2797 | 1.43 | 4103 | 0.97 | | | | | | |
| 49.87 | 2500 | 1.6 | 3667 | 1.09 | | | | | | |
| 44.89 | 2251 | 1.78 | 3301 | 1.21 | 4501 | 0.89 | | | | |
| 40.65 | 2038 | 1.96 | 2989 | 1.34 | 4076 | 0.98 | | | | |
| 36.05 | 1807 | 2.21 | 2651 | 1.51 | 3615 | 1.11 | 4458 | 0.9 | | |
| 32.60 | 1634 | 2.45 | 2397 | 1.67 | 3269 | 1.22 | 4032 | 0.99 | | |
| 27.63 | | | | | | | 3417 | 1.17 | 4064 | 0.98 |
| 26.39 | 1323 | 3.02 | 1941 | 2.06 | 2646 | 1.51 | | | | |
| 24.13 | | | | | | | 2984 | 1.34 | 3549 | 1.13 |
| 23.59 | 1183 | 3.38 | 1735 | 2.31 | 2365 | 1.69 | | | | |
| 21.23 | 1064 | 3.76 | 1561 | 2.56 | 2129 | 1.88 | 2626 | 1.52 | 3122 | 1.28 |
| 19.23 | 964 | 4.15 | 1414 | 2.83 | 1928 | 2.07 | 2378 | 1.68 | 2828 | 1.41 |
| 17.05 | | | 1254 | 3.19 | 1710 | 2.34 | 2109 | 1.9 | 2508 | 1.59 |
| 15.42 | | | 1134 | 3.53 | 1546 | 2.59 | 1907 | 2.1 | 2268 | 1.76 |
| 13.07 | | | 961 | 4.16 | 1311 | 3.05 | 1616 | 2.48 | 1922 | 2.08 |
| 11.41 | | | 839 | 4.77 | 1144 | 3.5 | 1411 | 2.83 | 1678 | 2.38 |
| 9.55 | | | | | 958 | 4.18 | 1181 | 3.39 | 1405 | 2.85 |
| 8.26 | | | | | 828 | 4.83 | 1022 | 3.91 | 1215 | 3.29 |

S37-AM

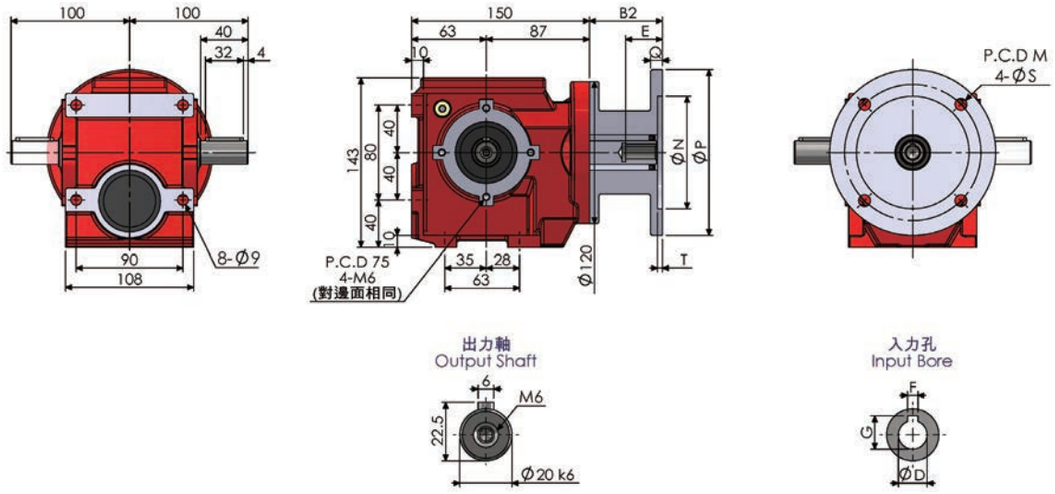


SF37-AM

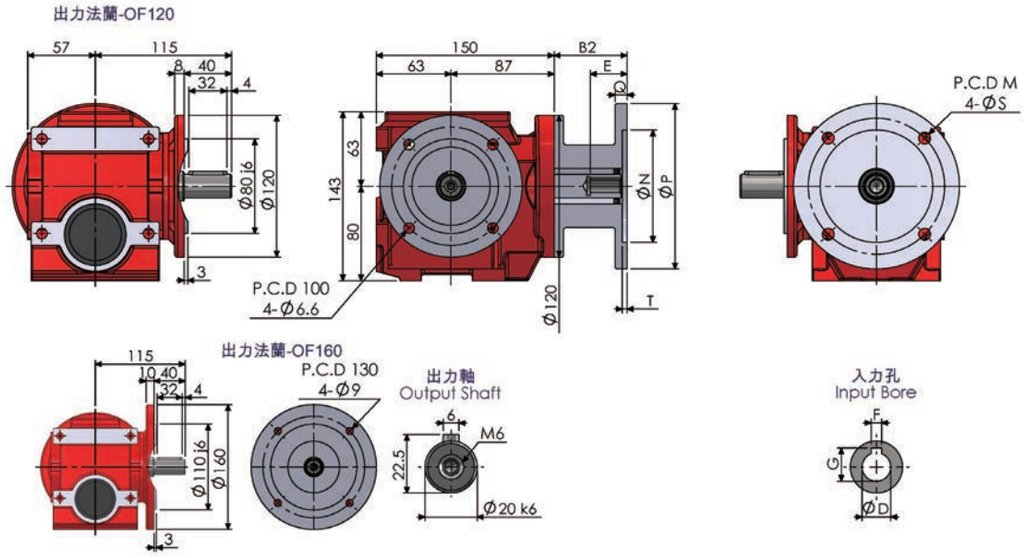


SA37-AM

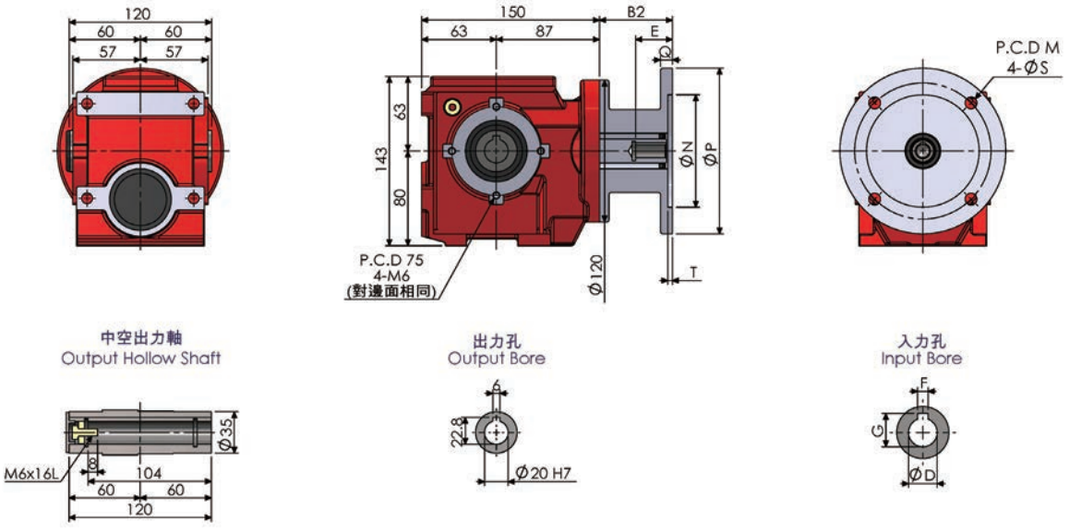

SAF37-AM

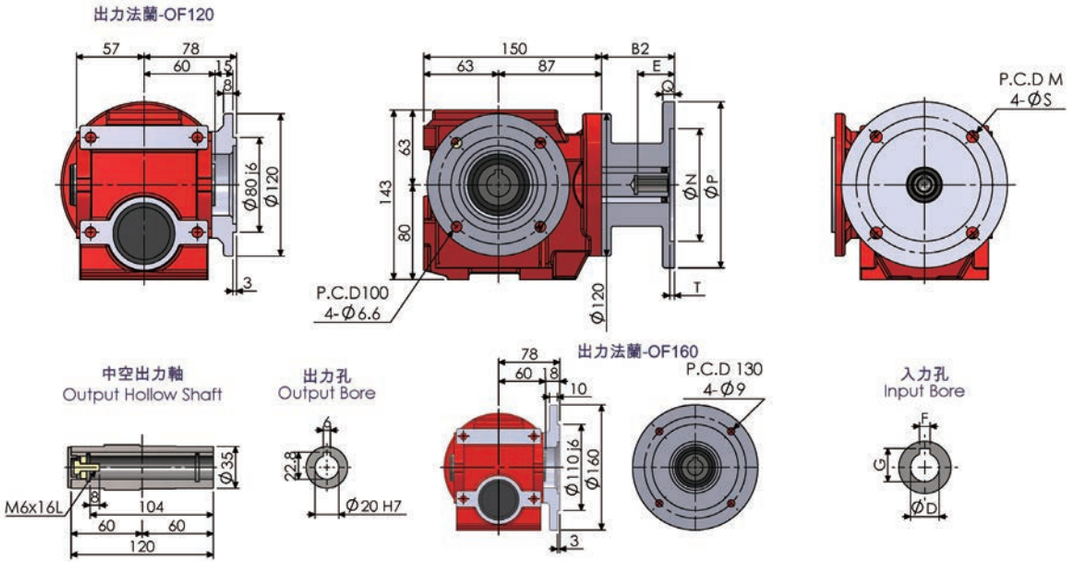


S37AD

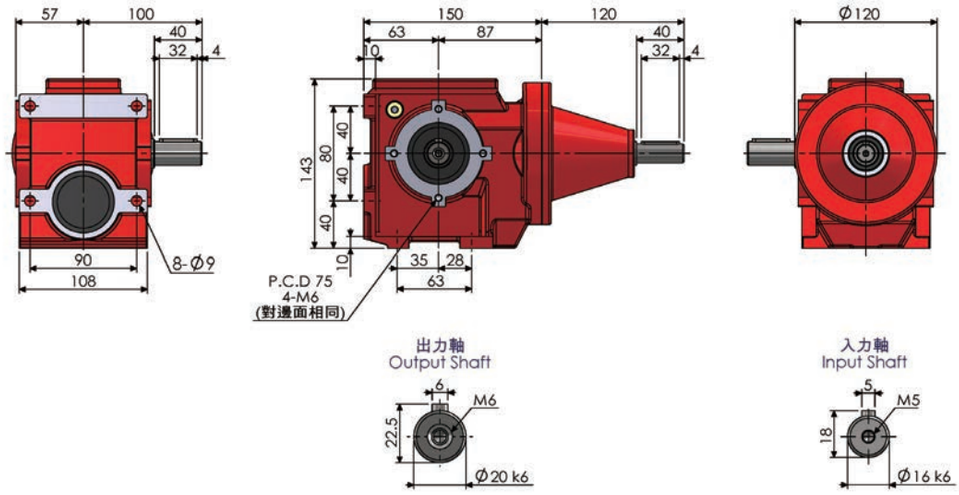


S37

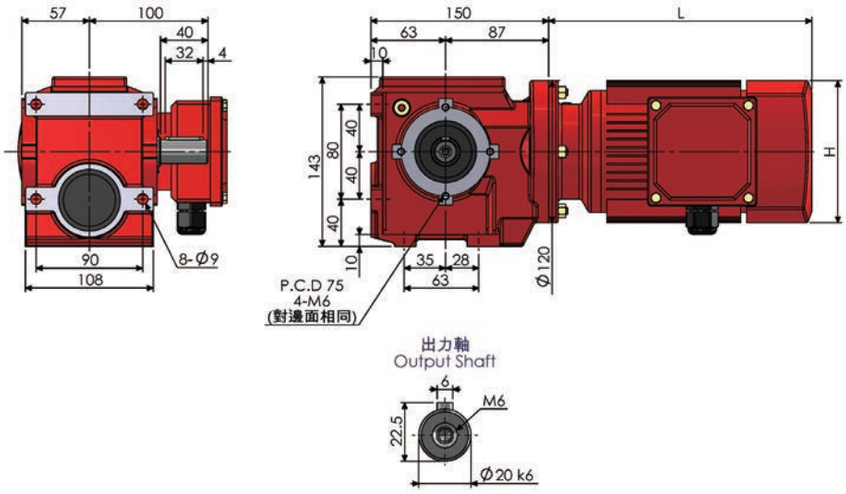

SA37T-AM

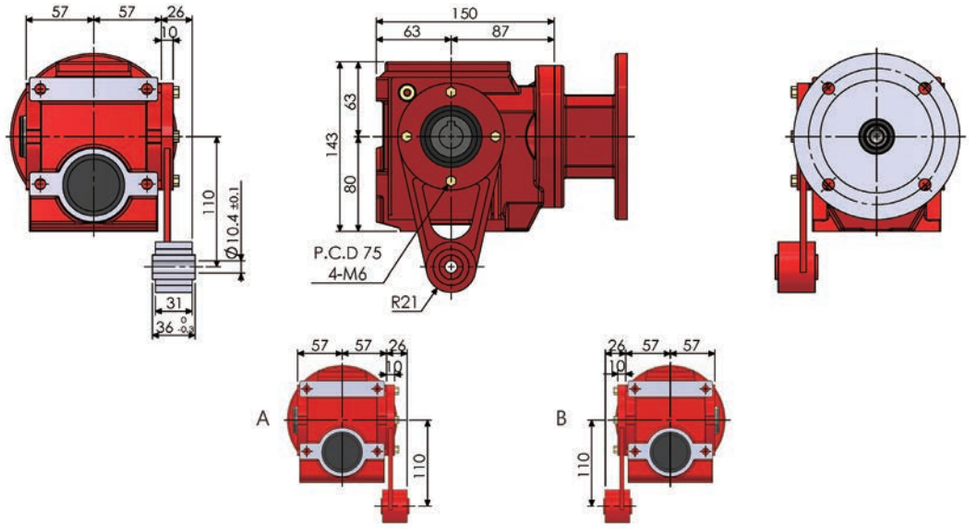


S37-RF17-AM

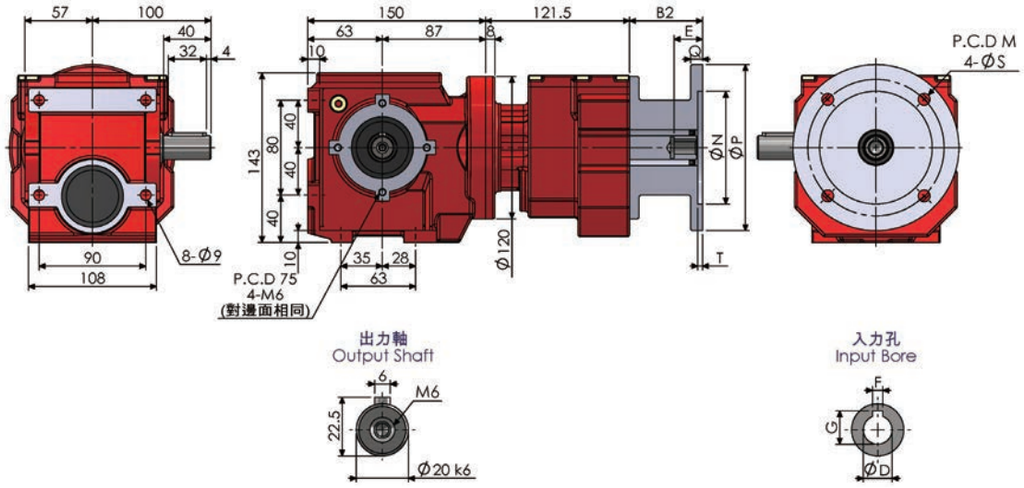


| 尺寸表 ( 單位：mm) Dimension (Unit：mm) | | | | | | | | | | | |
|---|---|---|---|---|---|---|---|---|---|---|---|
| AM | B2 | E | M | N | P | Q | S | T | 入力孔 Input Bore | | |
| | | | | | | | | | D | F | G |
| 63 | 61.5 | 24 | 115 | 95 | 140 | 10 | 10 | 4 | 11 | 4 | 12.8 |
| 71 | 61.5 | 31 | 130 | 110 | 160 | 10 | 10 | 4 | 14 | 5 | 16.3 |
| 80 | 80 | 41 | 165 | 130 | 200 | 12 | 12 | 4 | 19 | 6 | 21.8 |
| 90 | 80 | 51 | 165 | 130 | 200 | 12 | 12 | 4 | 24 | 8 | 27.3 |
| 100 | 98 | 61 | 215 | 180 | 250 | 15 | 14 | 4.5 | 28 | 8 | 31.3 |

NOTE

S47-AM

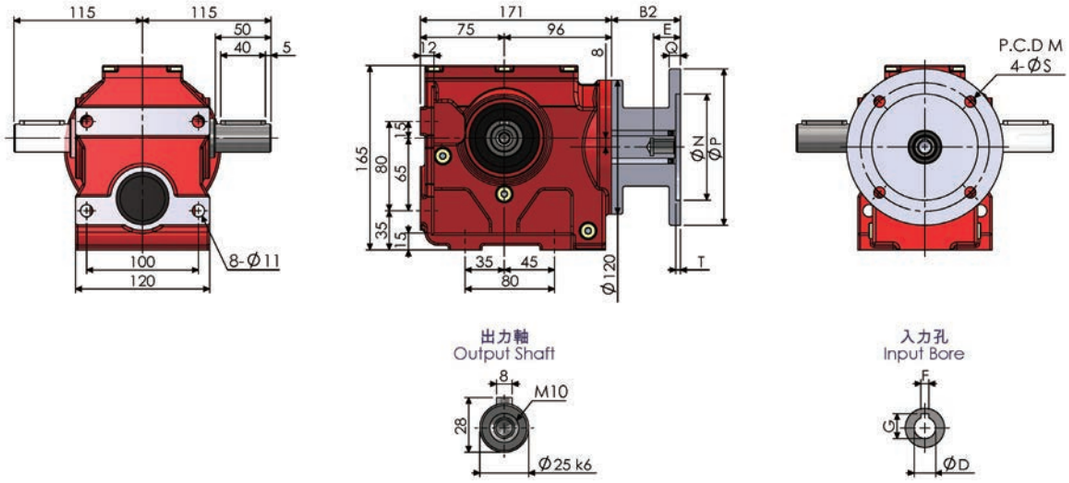


SF47-AM

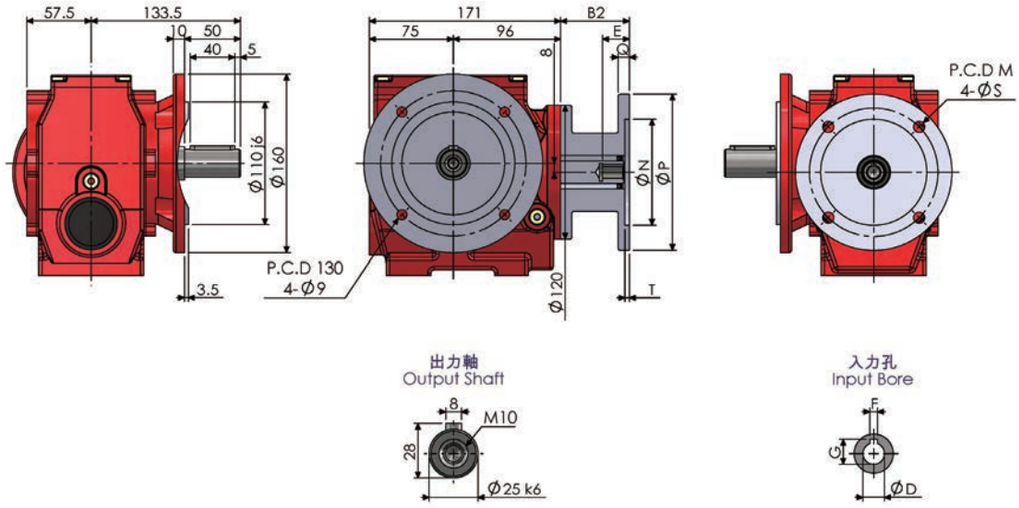


SA47-AM

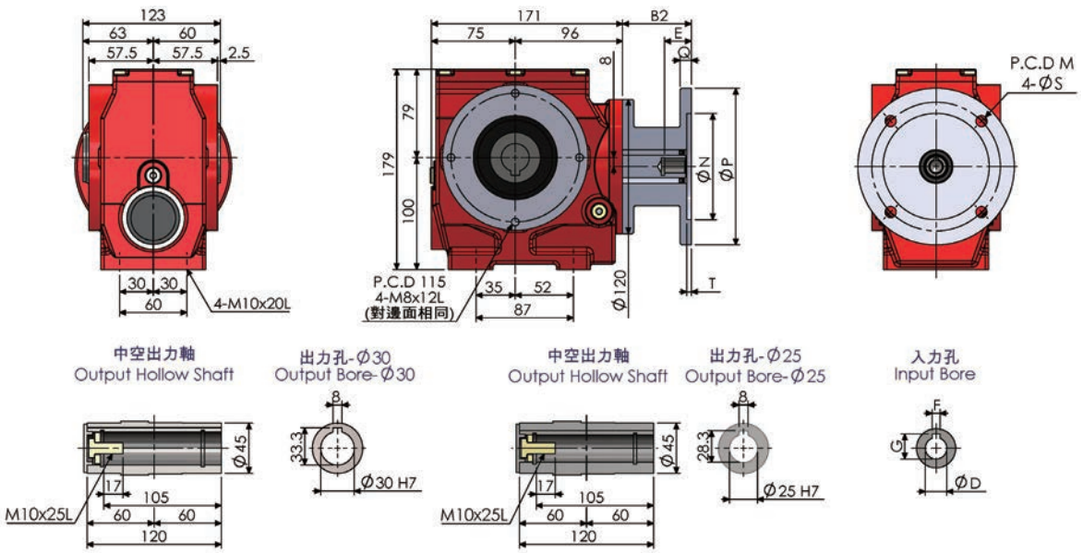

SAF47-AM

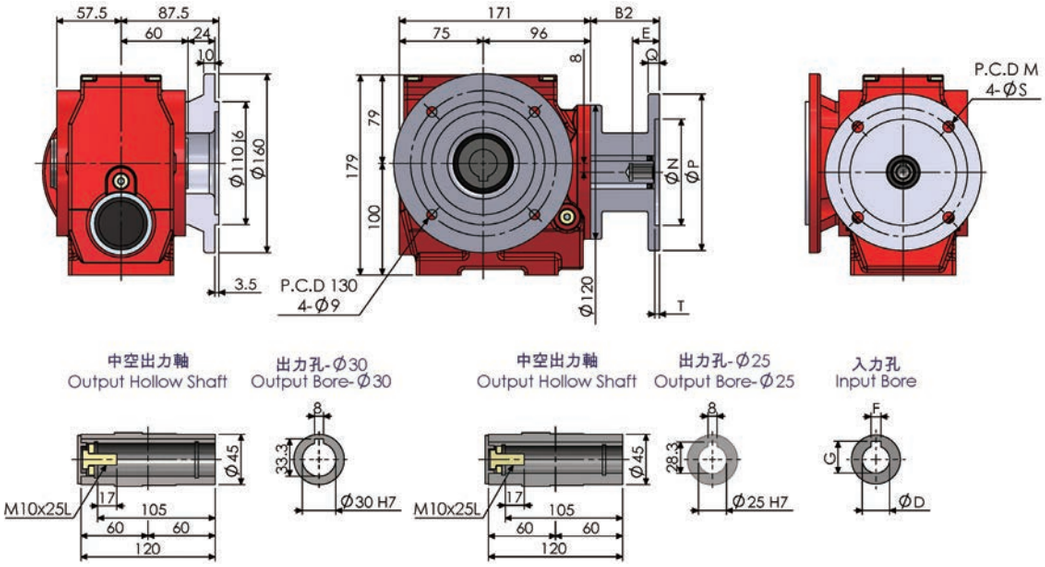


S47AD

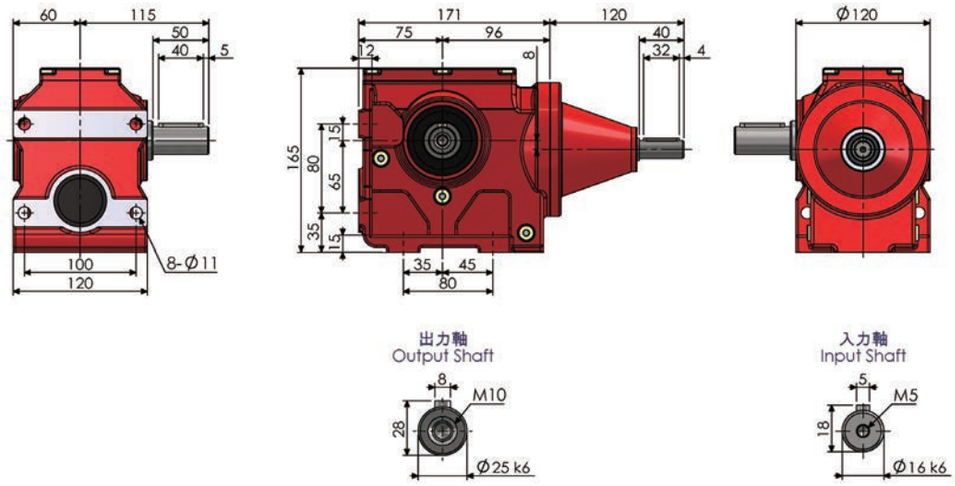


S47

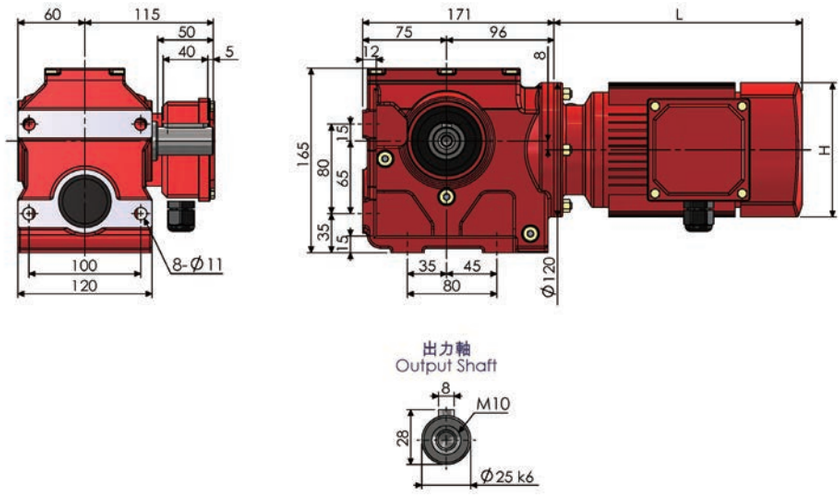

SA47T-AM

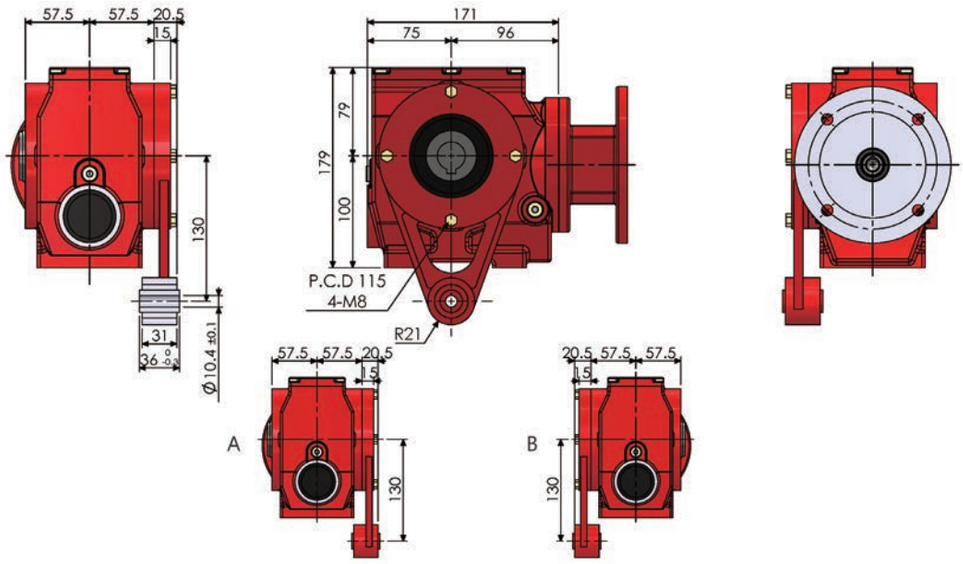


S47-RF17-AM

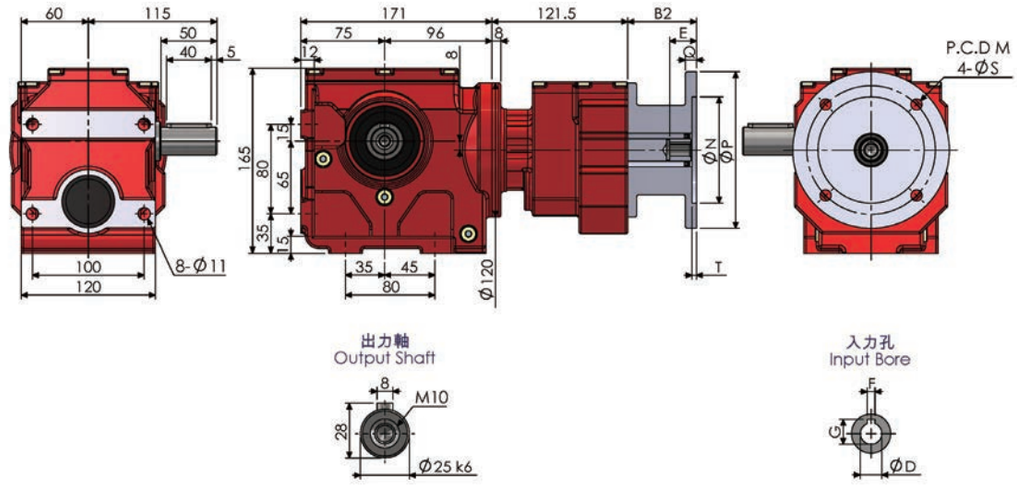


| 尺寸表 ( 單位：mm) Dimension (Unit：mm) | | | | | | | | | | | |
|---|---|---|---|---|---|---|---|---|---|---|---|
| AM | B2 | E | M | N | P | Q | S | T | 入力孔 Input Bore | | |
| | | | | | | | | | D | F | G |
| 63 | 61.5 | 24 | 115 | 95 | 140 | 10 | 10 | 4 | 11 | 4 | 12.8 |
| 71 | 61.5 | 31 | 130 | 110 | 160 | 10 | 10 | 4 | 14 | 5 | 16.3 |
| 80 | 80 | 41 | 165 | 130 | 200 | 12 | 12 | 4 | 19 | 6 | 21.8 |
| 90 | 80 | 51 | 165 | 130 | 200 | 12 | 12 | 4 | 24 | 8 | 27.3 |
| 100 | 98 | 61 | 215 | 180 | 250 | 15 | 14 | 4.5 | 28 | 8 | 31.3 |

NOTE

S57-AM

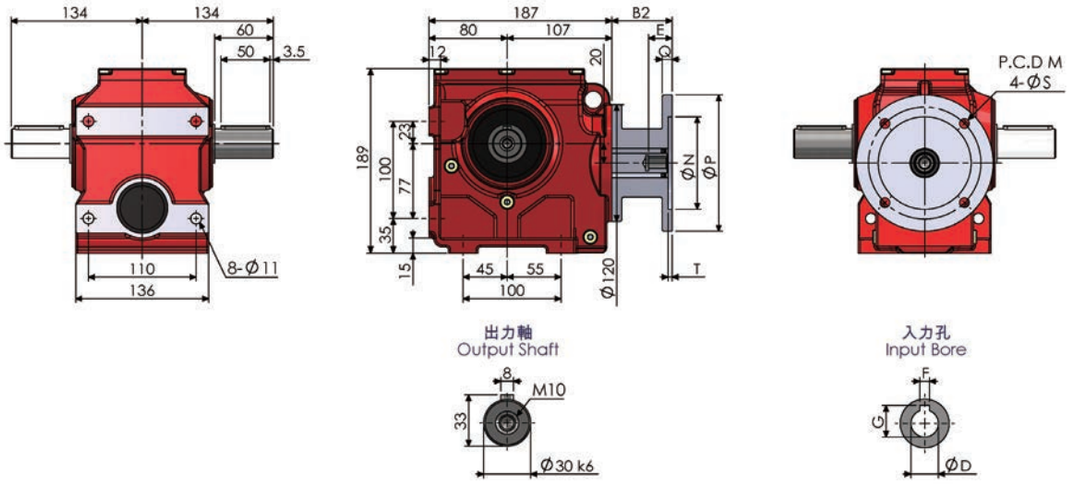


SF57-AM

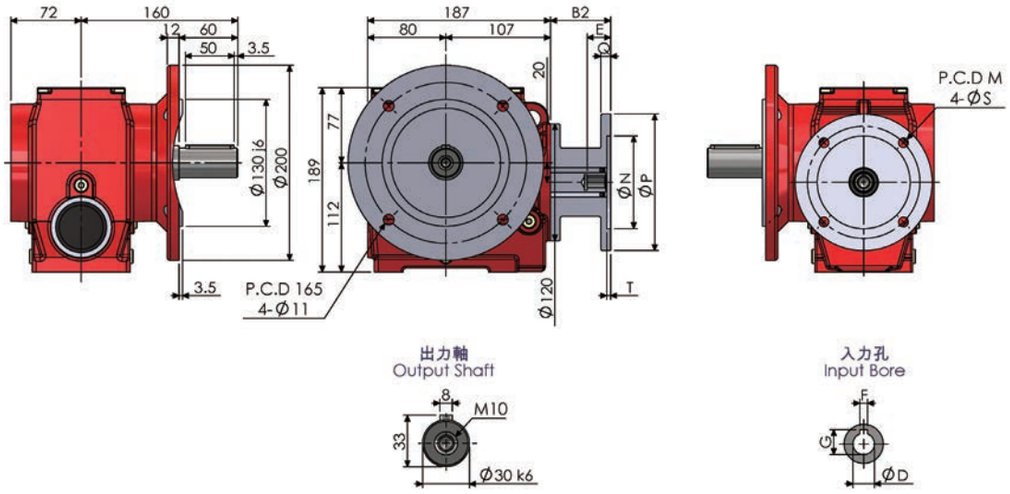


SA57-AM

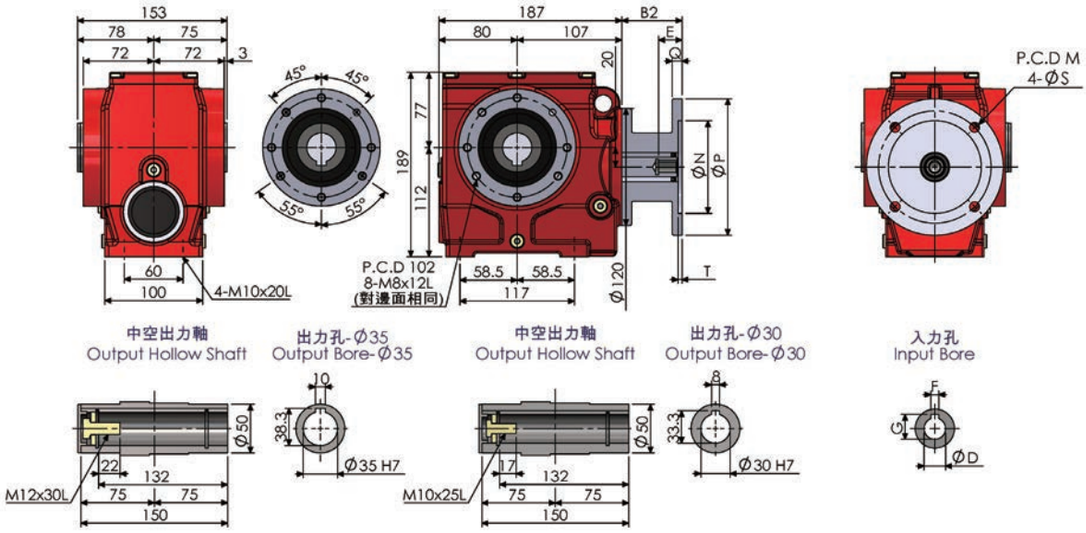

SAF57-AM

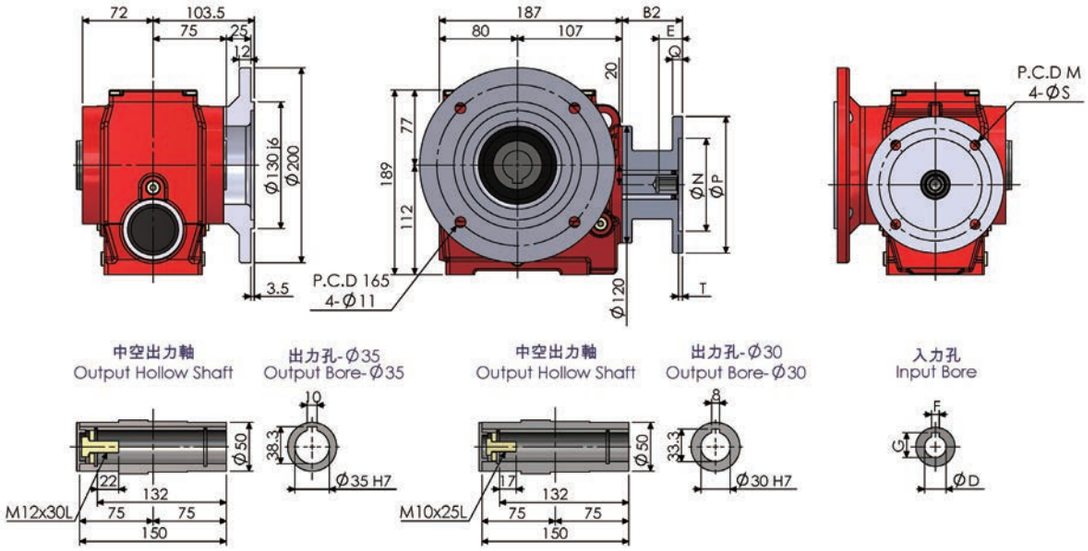


S57AD

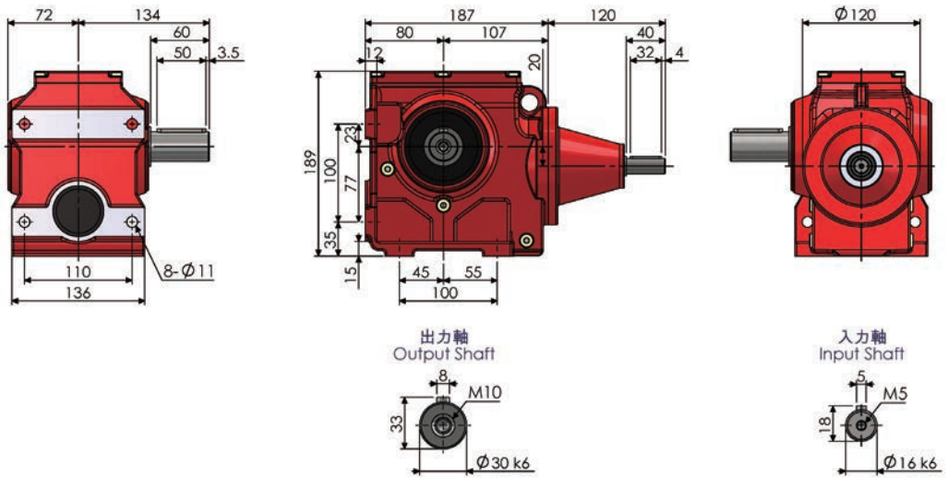


S57

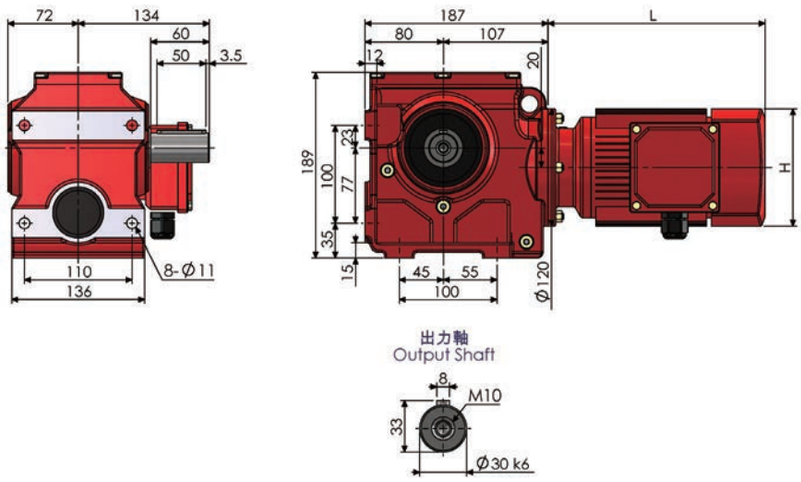

SA57T-AM

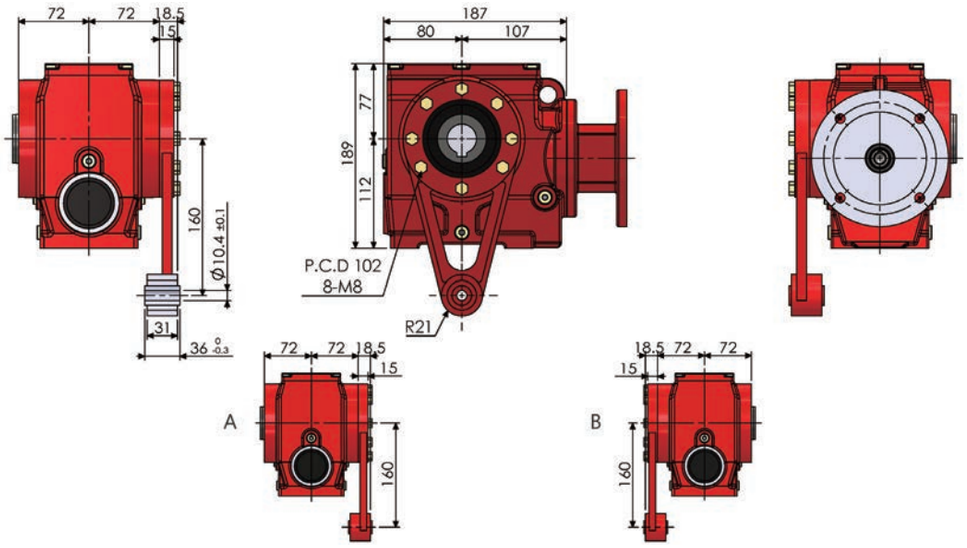


S57-RF17-AM

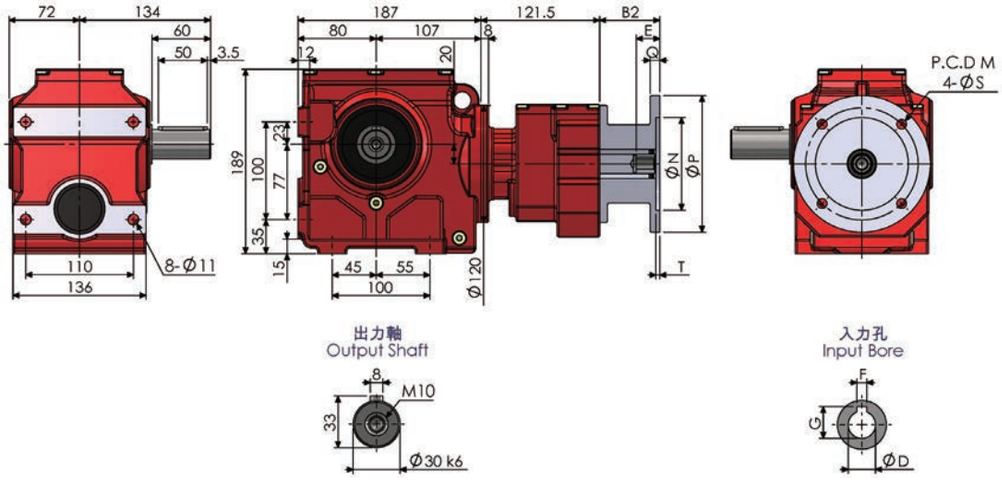


| 尺寸表 ( 單位：mm) Dimension (Unit：mm) | | | | | | | | | | | |
|---|---|---|---|---|---|---|---|---|---|---|---|
| AM | B2 | E | M | N | P | Q | S | T | 入力孔 Input Bore | | |
| | | | | | | | | | D | F | G |
| 63 | 61.5 | 24 | 115 | 95 | 140 | 10 | 10 | 4 | 11 | 4 | 12.8 |
| 71 | 61.5 | 31 | 130 | 110 | 160 | 10 | 10 | 4 | 14 | 5 | 16.3 |
| 80 | 80 | 41 | 165 | 130 | 200 | 12 | 12 | 4 | 19 | 6 | 21.8 |
| 90 | 80 | 51 | 165 | 130 | 200 | 12 | 12 | 4 | 24 | 8 | 27.3 |
| 100 | 98 | 61 | 215 | 180 | 250 | 15 | 14 | 4.5 | 28 | 8 | 31.3 |

NOTE

S67-AM

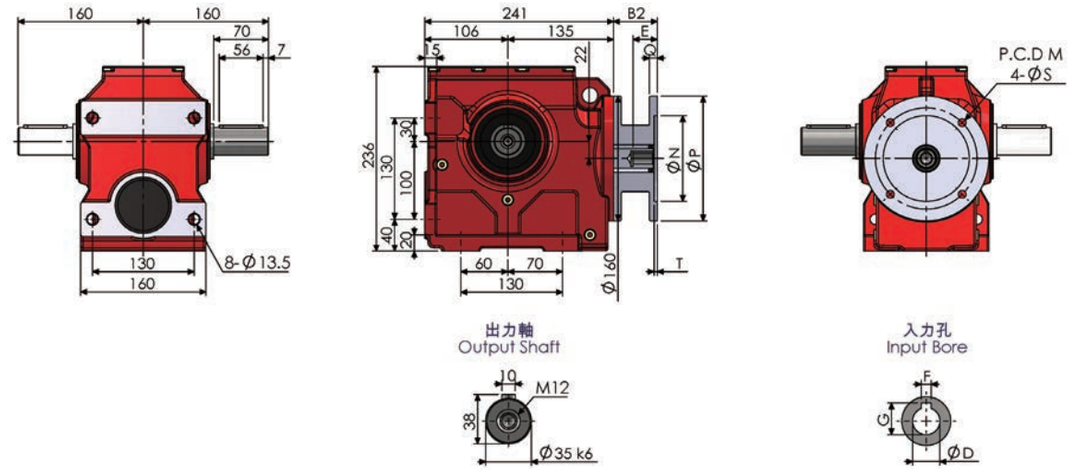


SF67-AM

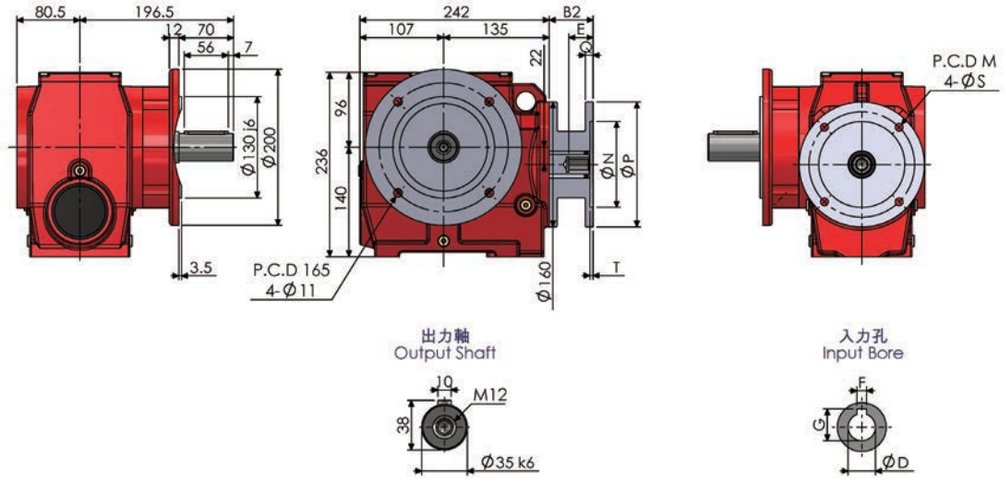


SA67-AM

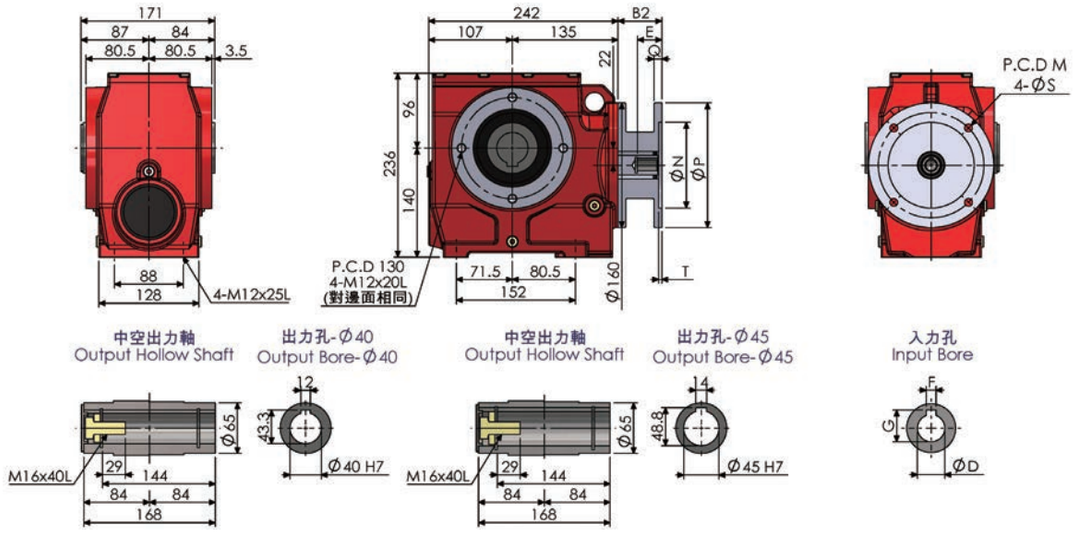

SAF67-AM

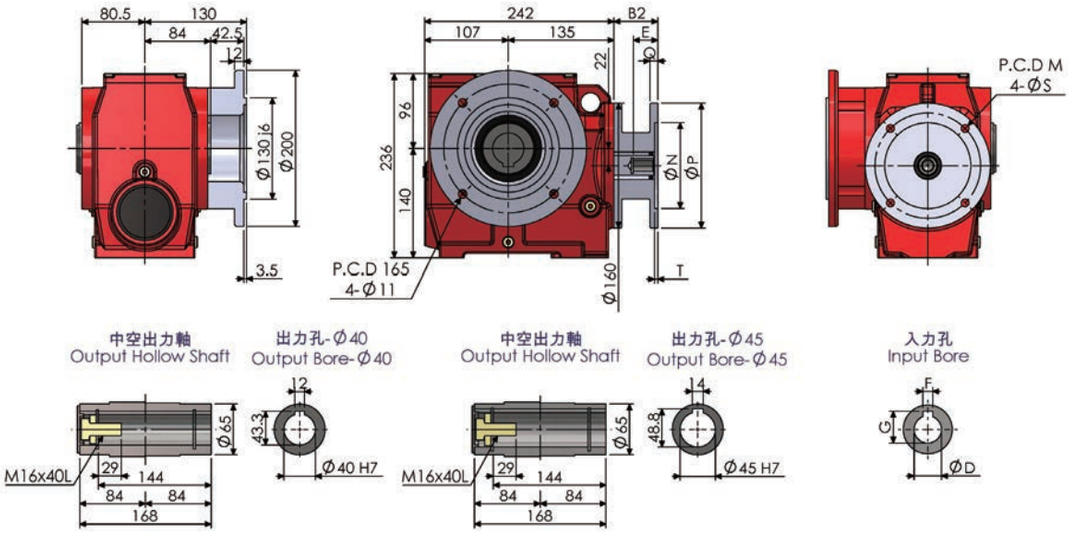


S67AD

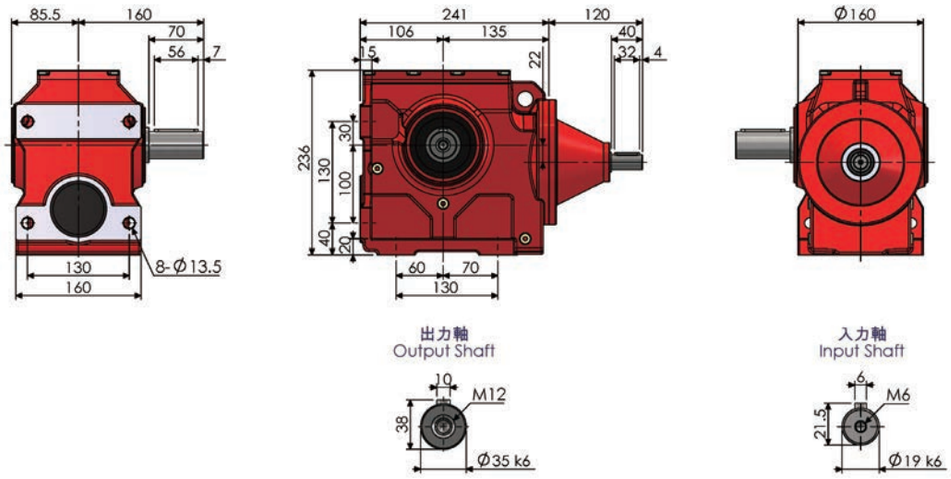


S67

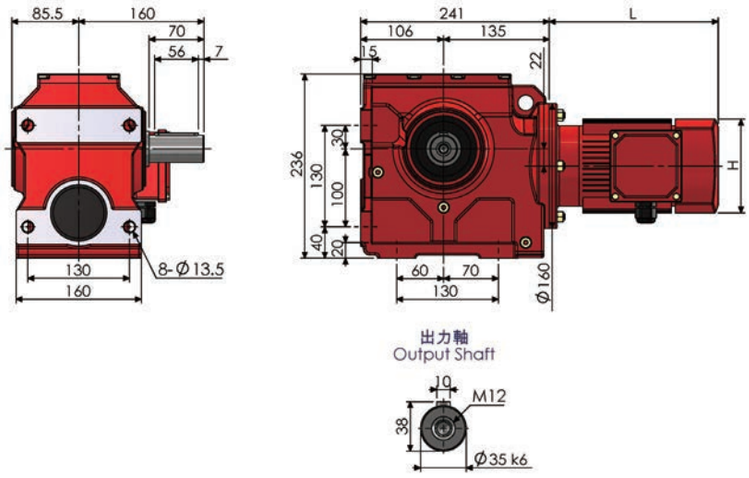

SA67T-AM

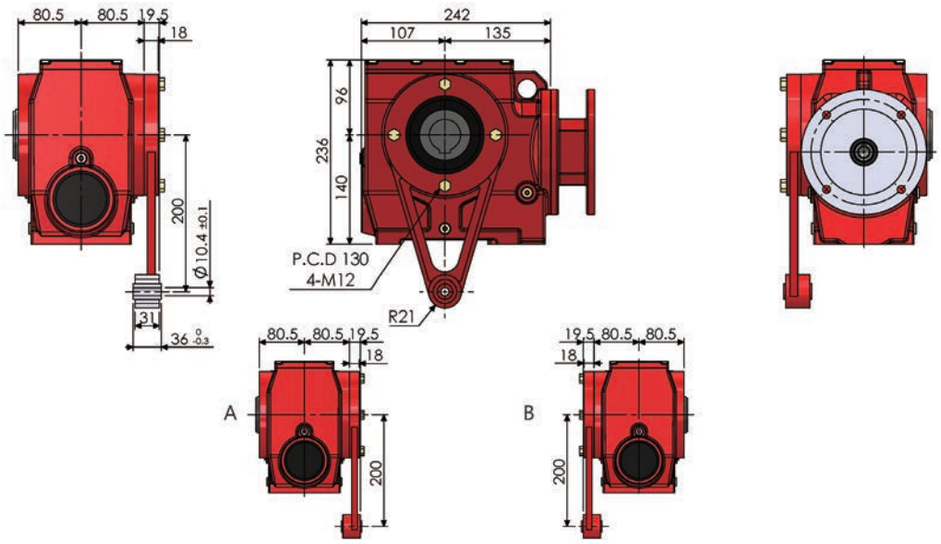


S67-RF37-AM

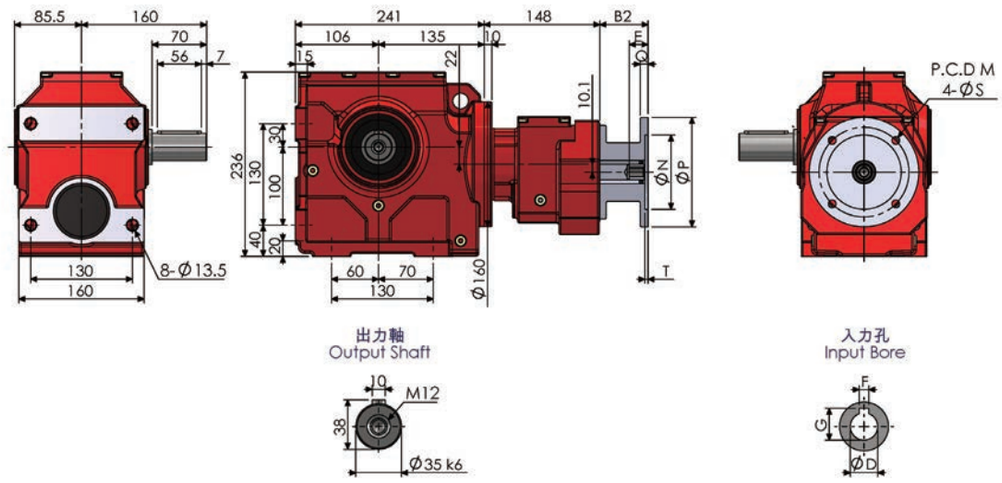


| 尺寸表 ( 單位：mm) Dimension (Unit：mm) | | | | | | | | | | | |
|---|---|---|---|---|---|---|---|---|---|---|---|
| AM | B2 | E | M | N | P | Q | S | T | 入力孔 Input Bore | | |
| | | | | | | | | | D | F | G |
| 63 | 56 (61.5) | 24 | 115 | 95 | 140 | 10 | 10 | 4 | 11 | 4 | 12.8 |
| 71 | 56 (61.5) | 31 | 130 | 110 | 160 | 10 | 10 | 4 | 14 | 5 | 16.3 |
| 80 | 74.5 (80) | 41 | 165 | 130 | 200 | 12 | 12 | 4 | 19 | 6 | 21.8 |
| 90 | 74.5 (80) | 51 | 165 | 130 | 200 | 12 | 12 | 4 | 24 | 8 | 27.3 |
| 100 | 90.5 (98) | 61 | 215 | 180 | 250 | 15 | 14 | 4.5 | 28 | 8 | 31.3 |
| 112 | 90.5 | 61 | 215 | 180 | 250 | 15 | 14 | 4.5 | 28 | 8 | 31.3 |
| 132 | 123 | 81 | 265 | 230 | 300 | 16 | 14 | 4.5 | 38 | 10 | 41.8 |

括號內為 S67-RF37 雙段型斜齒輪減速機對應尺寸，入力法蘭規格為 AM63~AM100。
The number in ( ) is for Double Stages Dimension for S67-RF37, the input IEC Frame is AM63~AM100.

S77-AM

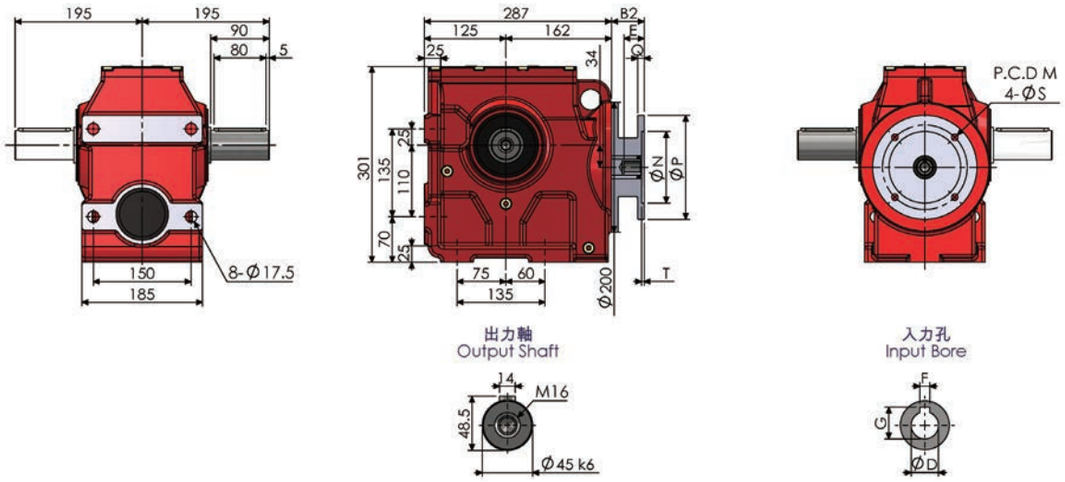


SF77-AM

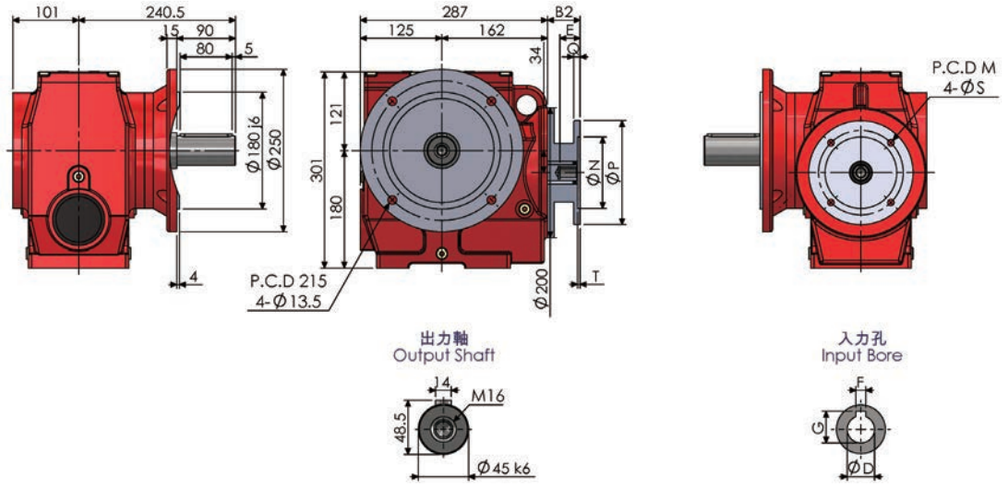


SA77-AM

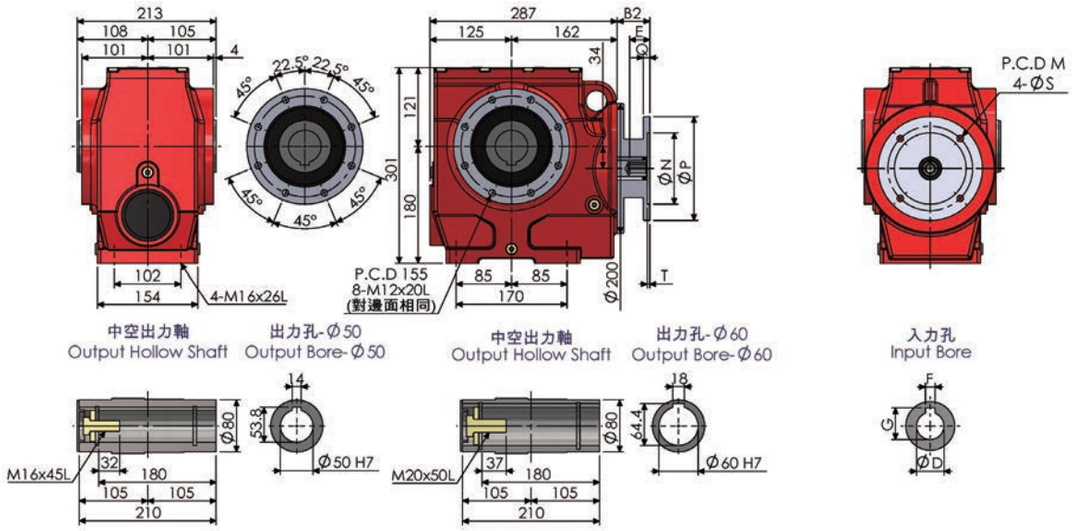

SAF77-AM

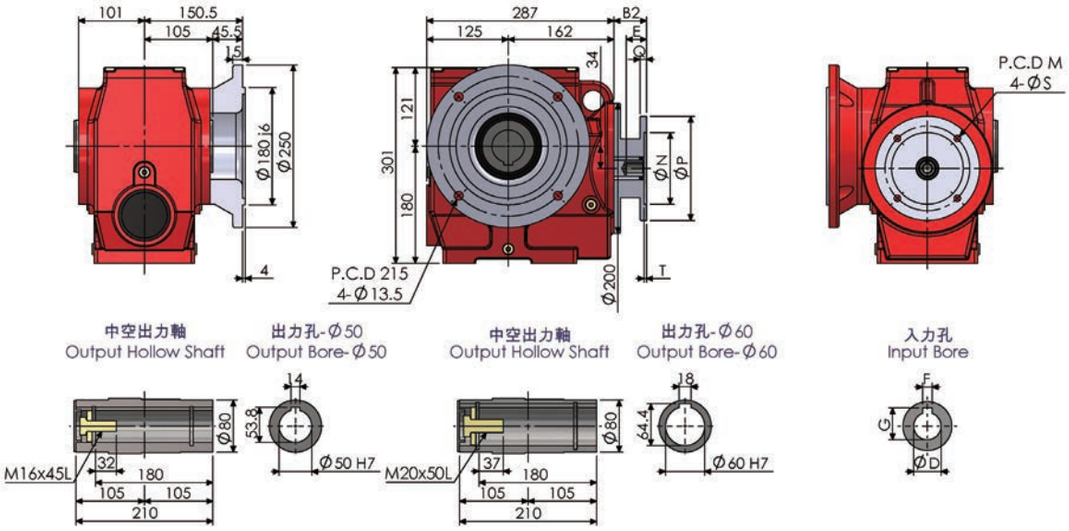


S77AD

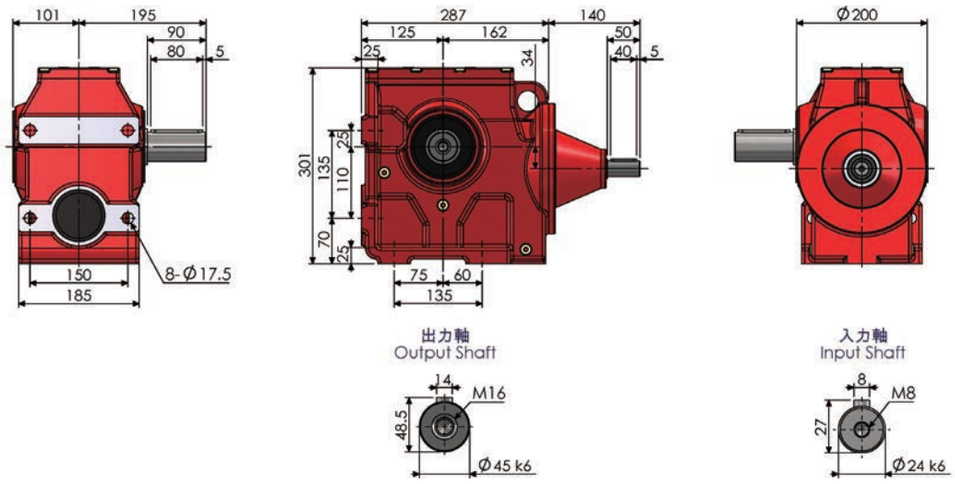


S77

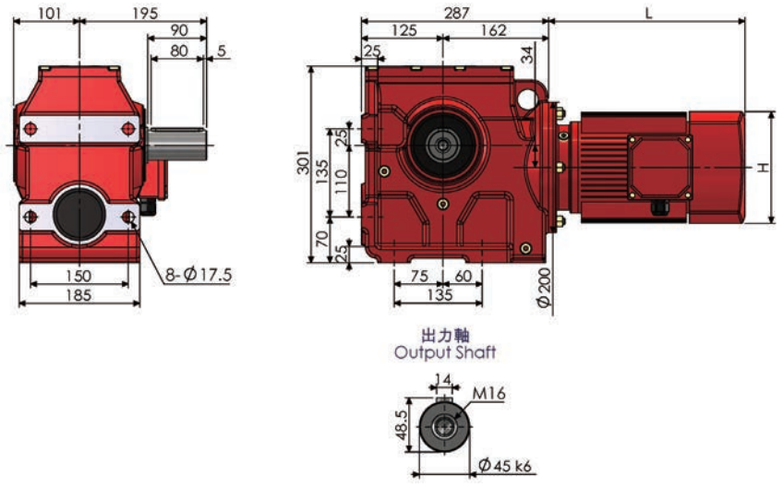

SA77T-AM

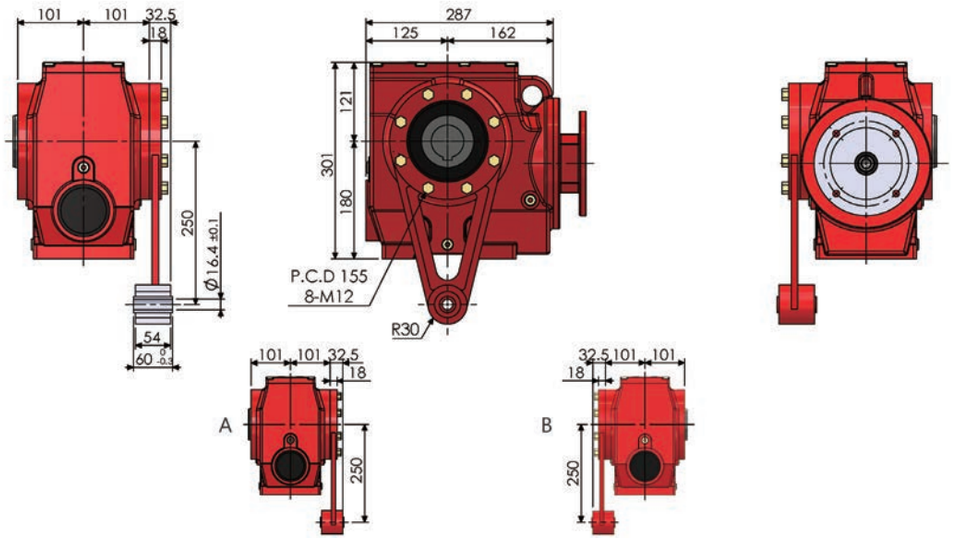


S77-RF37-AM

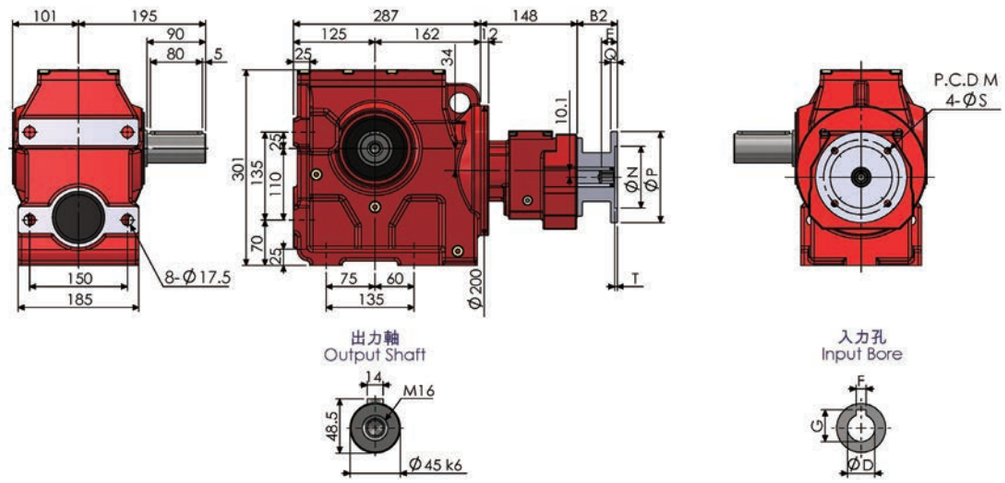


| 尺寸表 ( 單位：mm) Dimension (Unit：mm) | | | | | | | | | | | |
|---|---|---|---|---|---|---|---|---|---|---|---|
| AM | B2 | E | M | N | P | Q | S | T | 入力孔 Input Bore | | |
| | | | | | | | | | D | F | G |
| 63 | 50 (61.5) | 24 | 115 | 95 | 140 | 10 | 10 | 4 | 11 | 4 | 12.8 |
| 71 | 50 (61.5) | 31 | 130 | 110 | 160 | 10 | 10 | 4 | 14 | 5 | 16.3 |
| 80 | 68.5 (80) | 41 | 165 | 130 | 200 | 12 | 12 | 4 | 19 | 6 | 21.8 |
| 90 | 68.5 (80) | 51 | 165 | 130 | 200 | 12 | 12 | 4 | 24 | 8 | 27.3 |
| 100 | 82.5 (98) | 61 | 215 | 180 | 250 | 15 | 14 | 4.5 | 28 | 8 | 31.3 |
| 112 | 82.5 | 61 | 215 | 180 | 250 | 15 | 14 | 4.5 | 28 | 8 | 31.3 |
| 132 | 111 | 81 | 265 | 230 | 300 | 16 | 14 | 4.5 | 38 | 10 | 41.8 |
| 160 | 152.5 | 111 | 300 | 250 | 350 | 18 | 18 | 6 | 42 | 12 | 45.3 |

括號內為 S77-RF37 雙段型斜齒輪減速機對應尺寸，入力法蘭規格為 AM63~AM100。
The number in ( ) is for Double Stages Dimension for S77-RF37, the input IEC Frame is AM63~AM100.

S87-AM

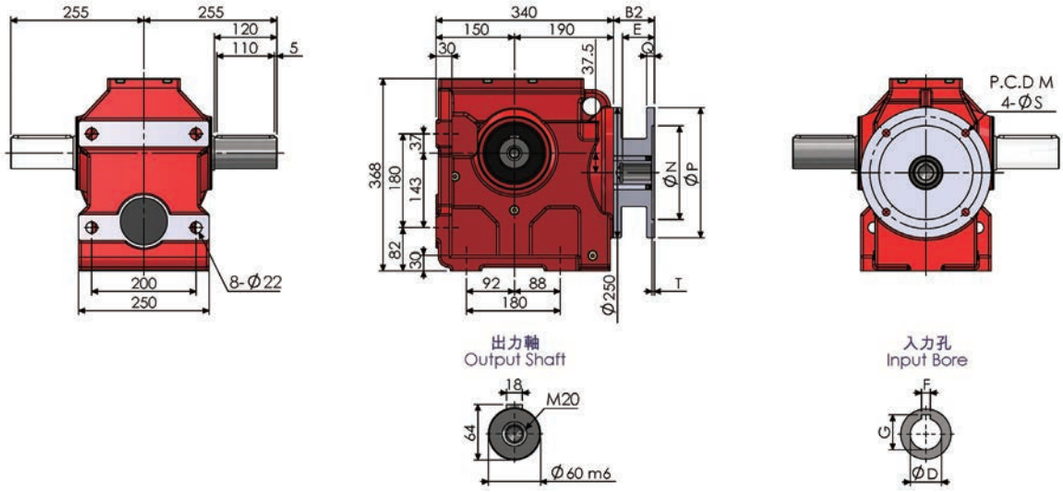


SF87-AM

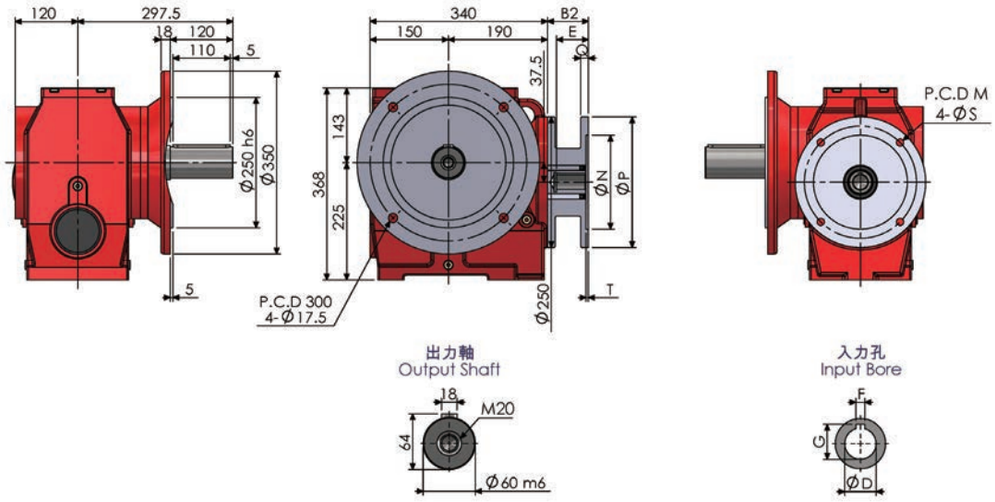


SA87-AM

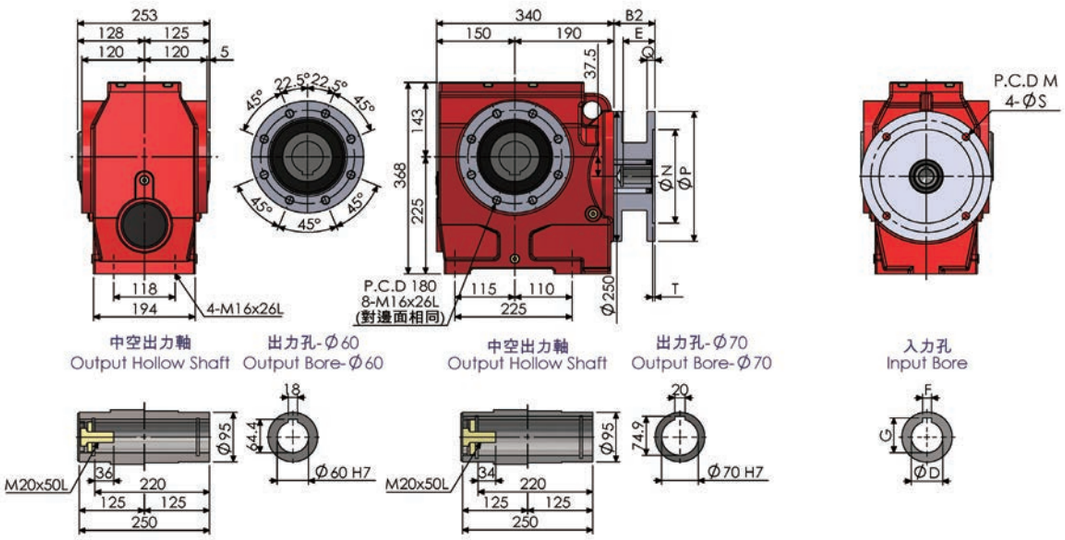

SAF87-AM

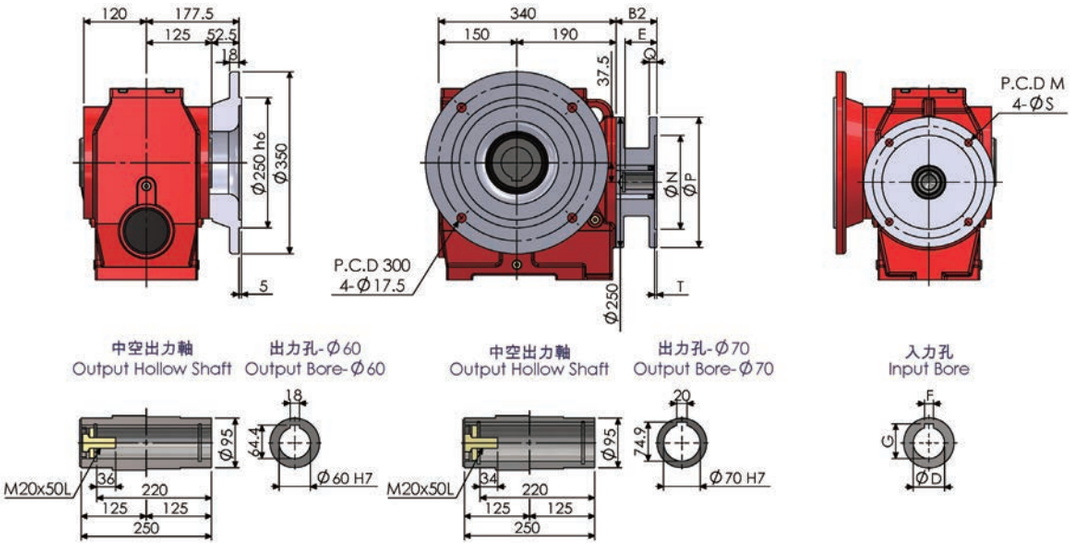


S87AD

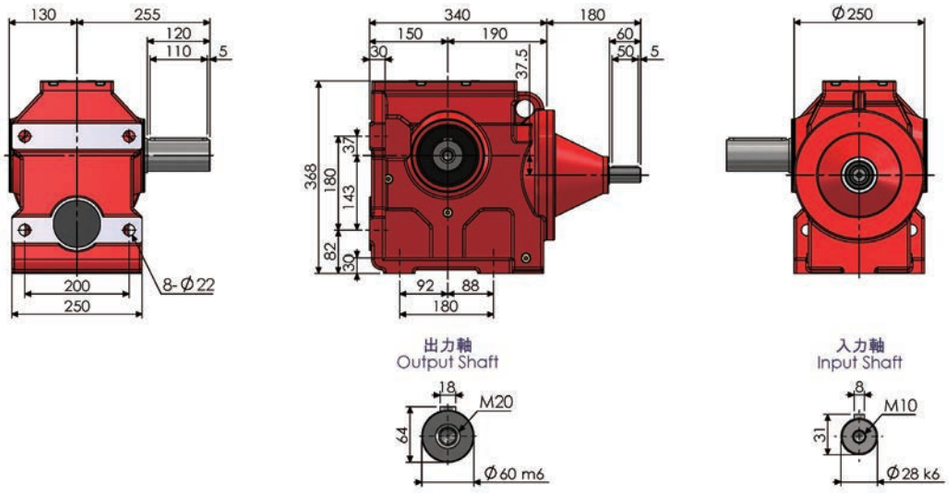


S87

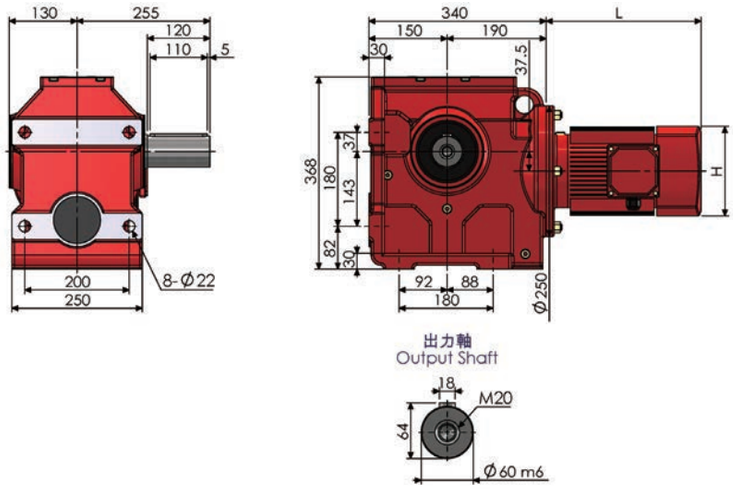

SA87T-AM

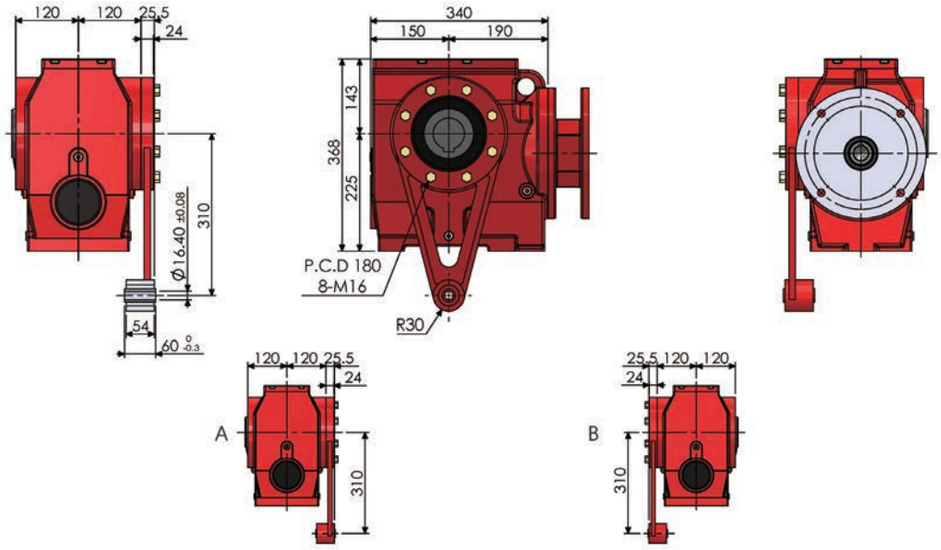


S87-RF57-AM

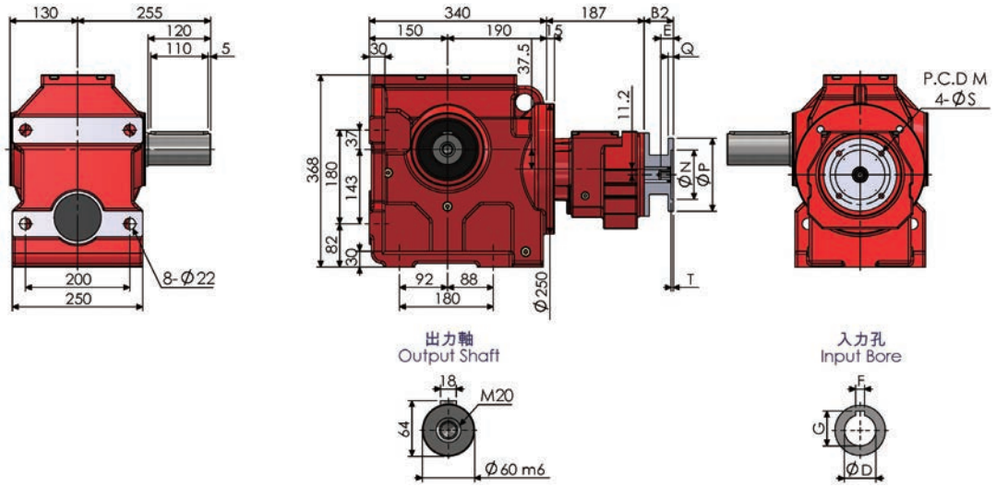


| 尺寸表 ( 單位：mm) Dimension (Unit：mm) | | | | | | | | | | | |
|---|---|---|---|---|---|---|---|---|---|---|---|
| AM | B2 | E | M | N | P | Q | S | T | 入力孔 Input Bore | | |
| | | | | | | | | | D | F | G |
| (63) | (56) | (24) | (115) | (95) | (140) | (10) | (10) | (4) | (11) | (4) | (12.8) |
| (71) | (56) | (31) | (130) | (110) | (160) | (10) | (10) | (4) | (14) | (5) | (16.3) |
| 80 | 63.5 (74.5) | 41 | 165 | 130 | 200 | 12 | 12 | 4 | 19 | 6 | 21.8 |
| 90 | 63.5 (74.5) | 51 | 165 | 130 | 200 | 12 | 12 | 4 | 24 | 8 | 27.3 |
| 100 | 78.5 (90.5) | 61 | 215 | 180 | 250 | 15 | 14 | 4.5 | 28 | 8 | 31.3 |
| 112 | 78.5 (90.5) | 61 | 215 | 180 | 250 | 15 | 14 | 4.5 | 28 | 8 | 31.3 |
| 132 | 106 (123) | 81 | 265 | 230 | 300 | 16 | 14 | 4.5 | 38 | 10 | 41.8 |
| 160 | 147.5 | 111 | 300 | 250 | 350 | 18 | 18 | 6 | 42 | 12 | 45.3 |
| 180 | 147.5 | 111 | 300 | 250 | 350 | 18 | 18 | 6 | 48 | 14 | 51.8 |

括號內為 S87-RF57 雙段型斜齒輪減速機對應尺寸，入力法蘭規格為 AM63~AM132。
The number in ( ) is for Double Stages Dimension for S87-RF57, the input IEC Frame is AM63~AM132.

S97-AM

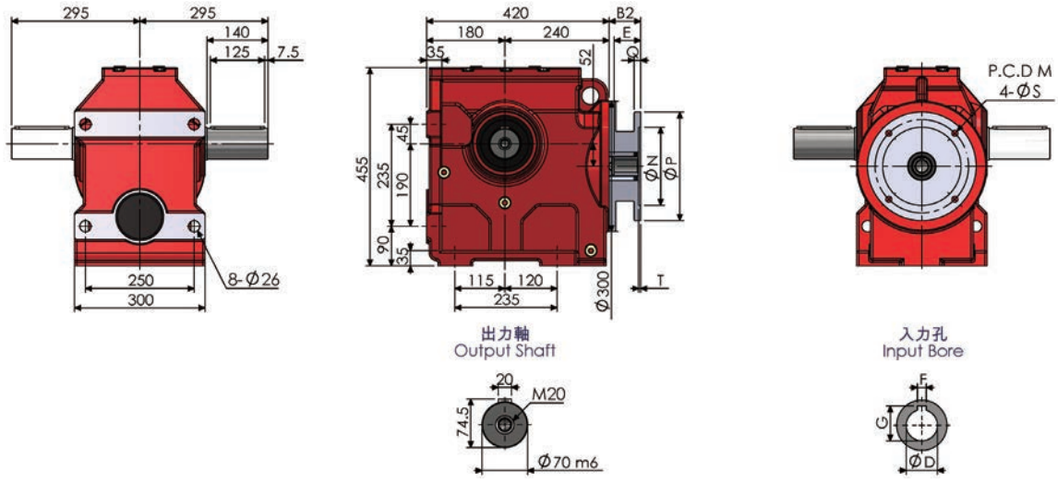


SF97-AM

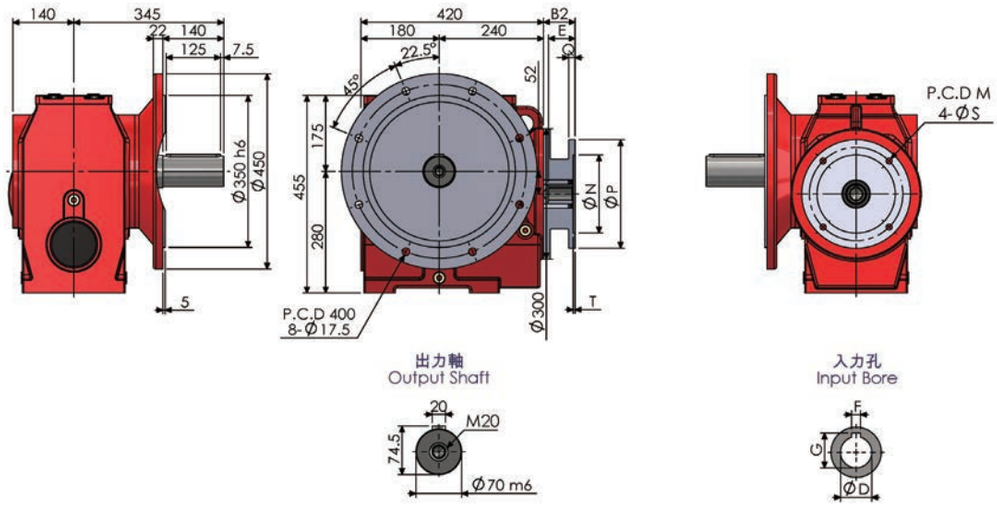


SA97-AM

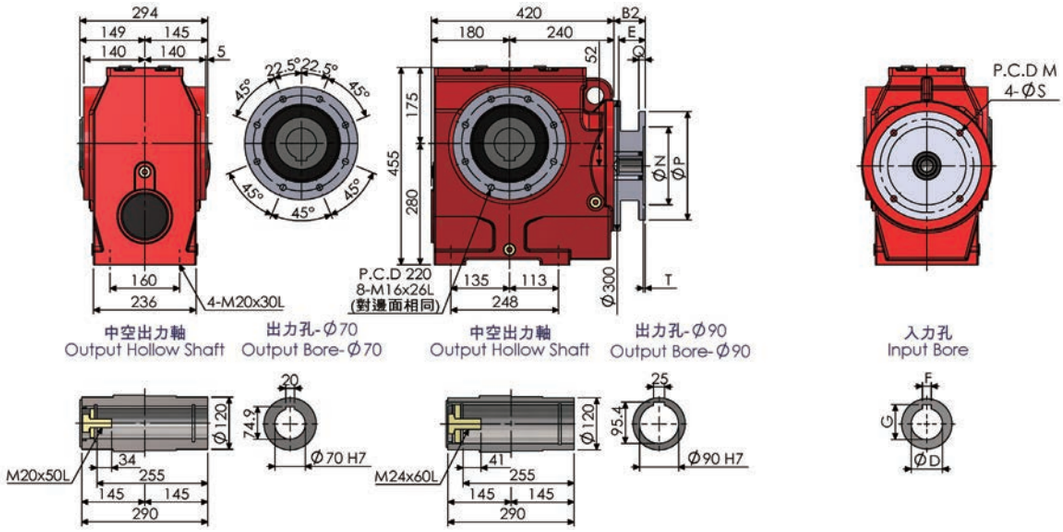

SAF97-AM

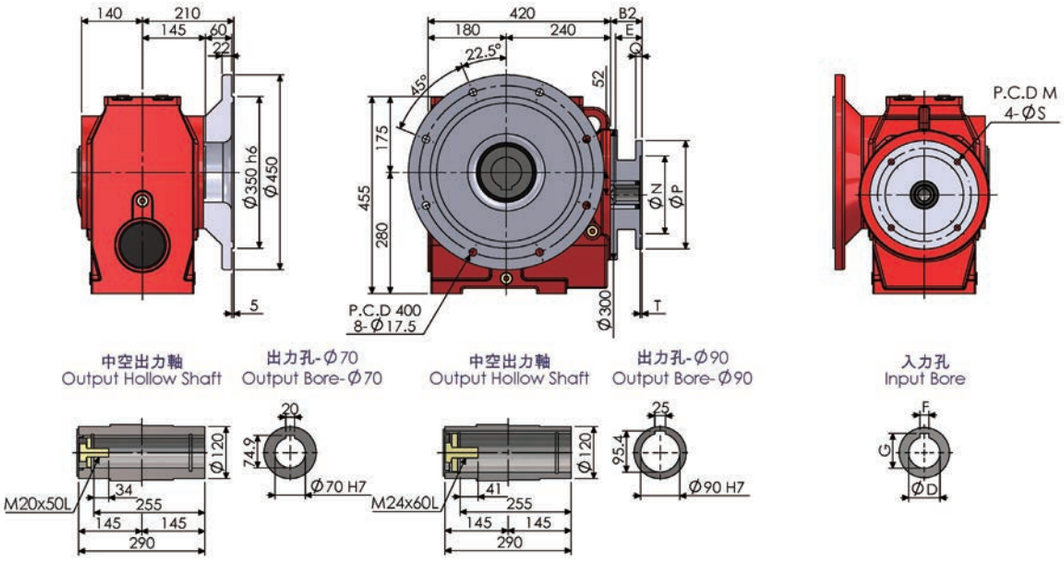


S97AD

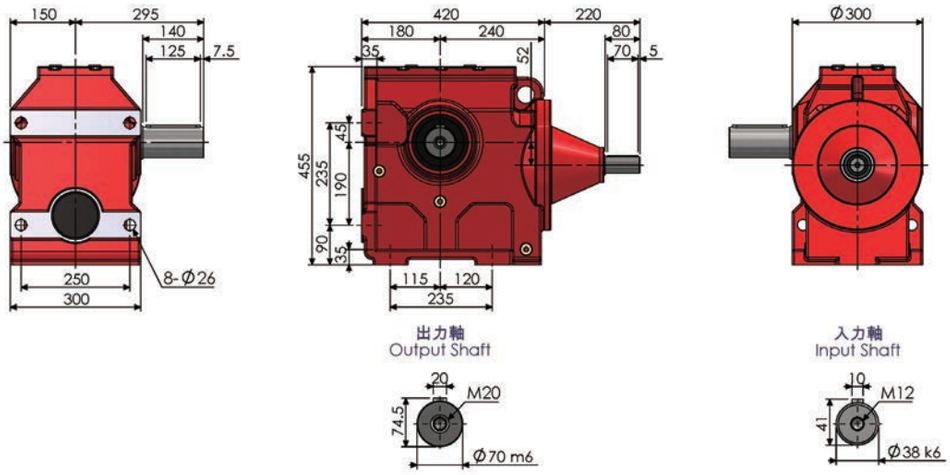


S97

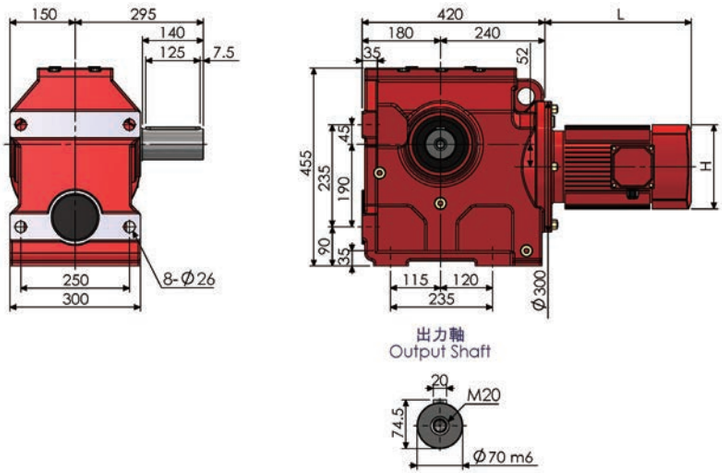

SA97T-AM

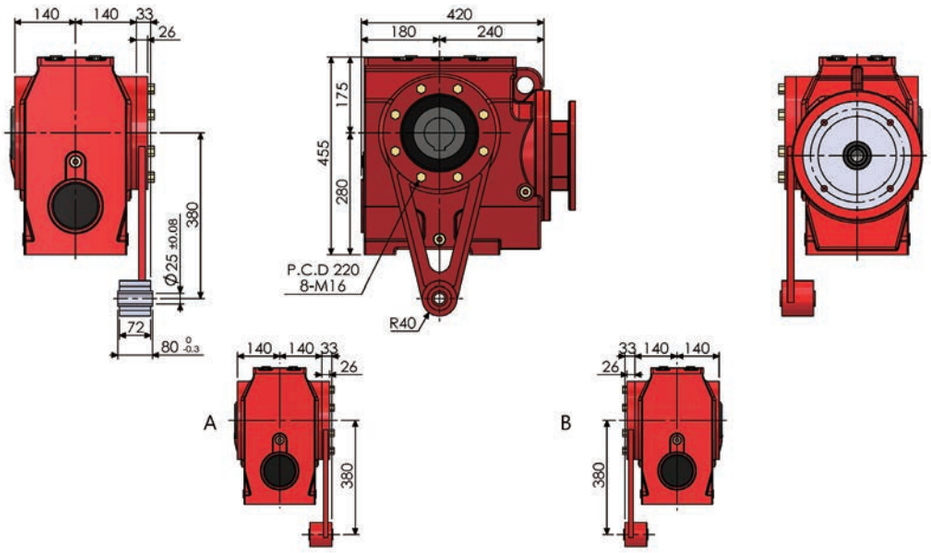


S97-RF57-AM

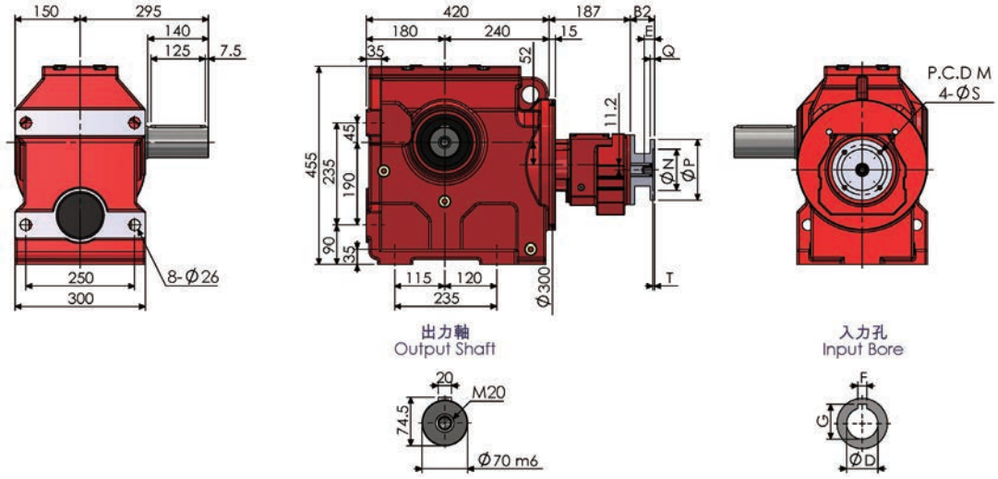


| 尺寸表 ( 單位：mm) Dimension (Unit：mm) | | | | | | | | | | | |
|---|---|---|---|---|---|---|---|---|---|---|---|
| AM | B2 | E | M | N | P | Q | S | T | 入力孔 Input Bore | | |
| | | | | | | | | | D | F | G |
| (63) | (56) | (24) | (115) | (95) | (140) | (10) | (10) | (4) | (11) | (4) | (12.8) |
| (71) | (56) | (31) | (130) | (110) | (160) | (10) | (10) | (4) | (14) | (5) | (16.3) |
| (80) | (74.5) | (41) | (165) | (130) | (200) | 12 | (12) | (4) | (19) | (6) | (21.8) |
| 90 | 57.5 (74.5) | 51 | 165 | 130 | 200 | 12 | 12 | 4 | 24 | 8 | 27.3 |
| 100 | 72.5 (90.5) | 61 | 215 | 180 | 250 | 15 | 14 | 4.5 | 28 | 8 | 31.3 |
| 112 | 72.5 (90.5) | 61 | 215 | 180 | 250 | 15 | 14 | 4.5 | 28 | 8 | 31.3 |
| 132 | 101 (123) | 81 | 265 | 230 | 300 | 16 | 14 | 4.5 | 38 | 10 | 41.8 |
| 160 | 142.5 | 111 | 300 | 250 | 350 | 18 | 18 | 6 | 42 | 12 | 45.3 |
| 180 | 142.5 | 111 | 300 | 250 | 350 | 18 | 18 | 6 | 48 | 14 | 51.8 |
| 200 | 144.5 | 111 | 350 | 300 | 400 | 20 | 18 | 6 | 55 | 16 | 59.3 |

括號內為 S97-RF57 雙段型斜齒輪減速機對應尺寸，入力法蘭規格為 AM63~AM132。
The number in ( ) is for Double Stages Dimension for S97-RF57, the input IEC Frame is AM63~AM132.

NOTE

NOTE

NOTE

NOTE

NOTE